05 JUN 2003 № 34301

Jada Toys R/C CAR TRANSMITTER CIRCUIT DIAGRAM(27.145MHZ)

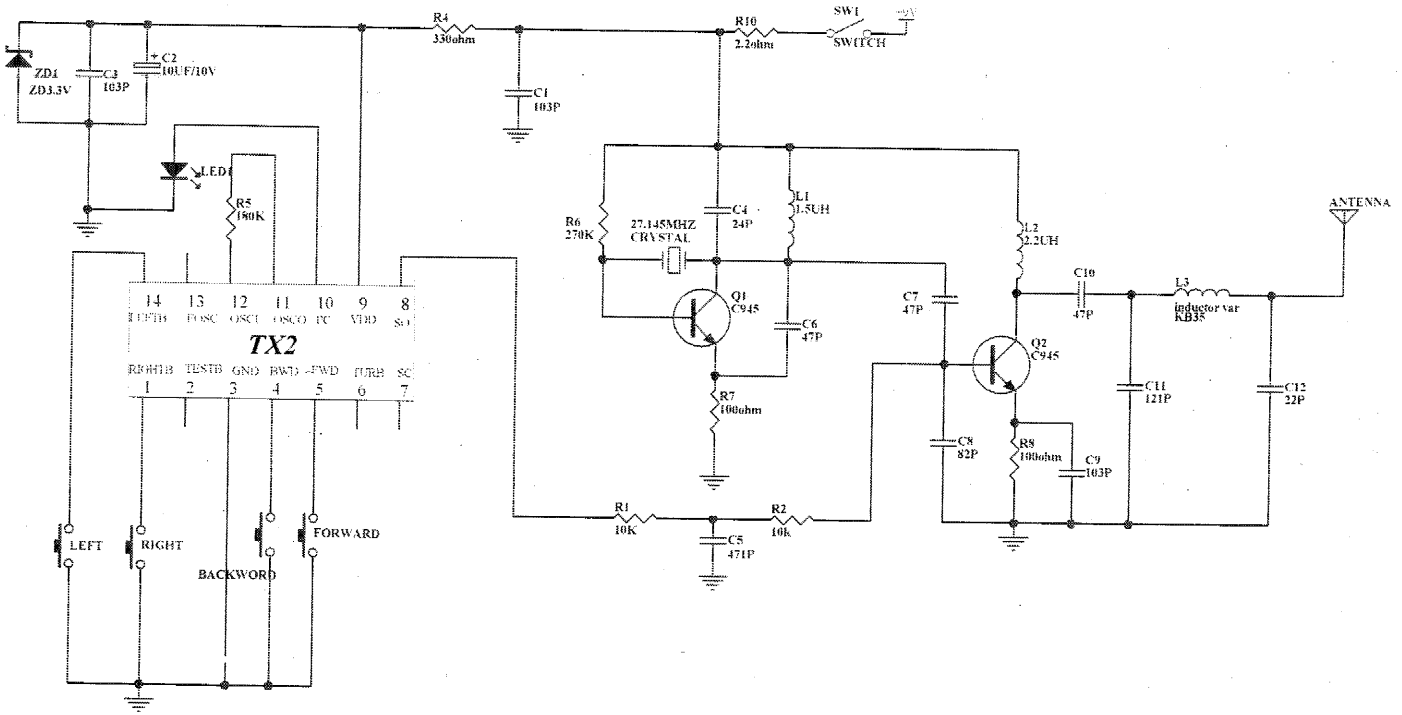

Title: remote control transmitter circuit(27.145mhz)		
Size: B	Number	Revision: Jada Toys
Date: 3-Jun-2003	Sheet of	
File: D:\KenQuan\ Jada toys RC car\TX27MHZ.Sch	Drawn By: Ken Quan	