REVISION RECORD			
LTR	ECO NO:	APPROVED:	DATE:

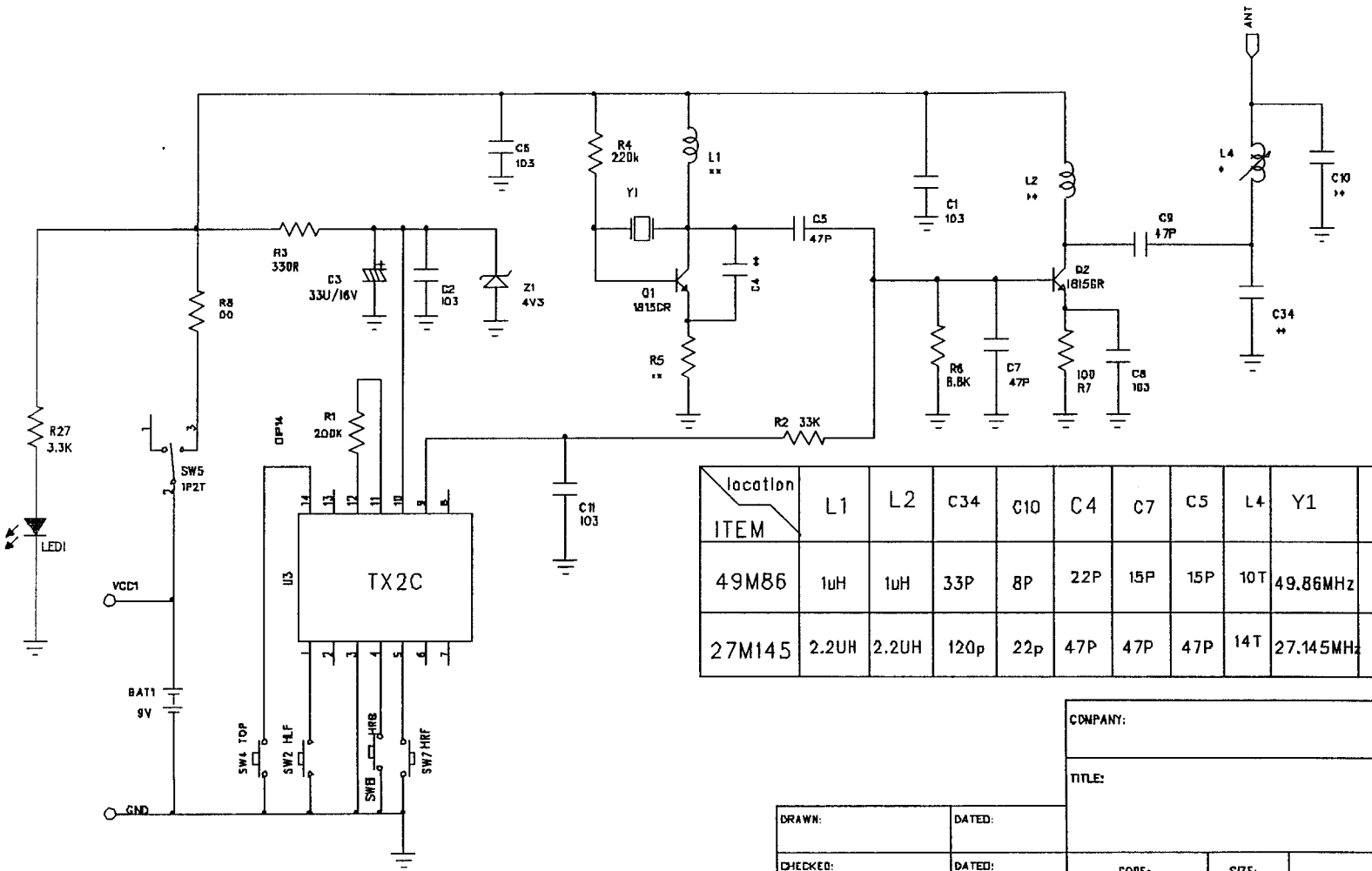

location / ITEM	L1	L2	C34	C10	C4	C7	C5	L4	Y1	R5
49M86	1uH	1uH	33P	8P	22P	15P	15P	10T	49.86MHz	330R
27M145	2.2UH	2.2UH	120p	22p	47P	47P	47P	14T	27.145MHz	100R

DRAWN:	DATED:
CHECKED:	DATED:
QUALITY CONTROL:	DATED:
RELEASED:	DATED:

COMPANY:

TITLE:

CODE:	SIZE:	DRAWING NO:	REV:

SCALE: SHEET: OF