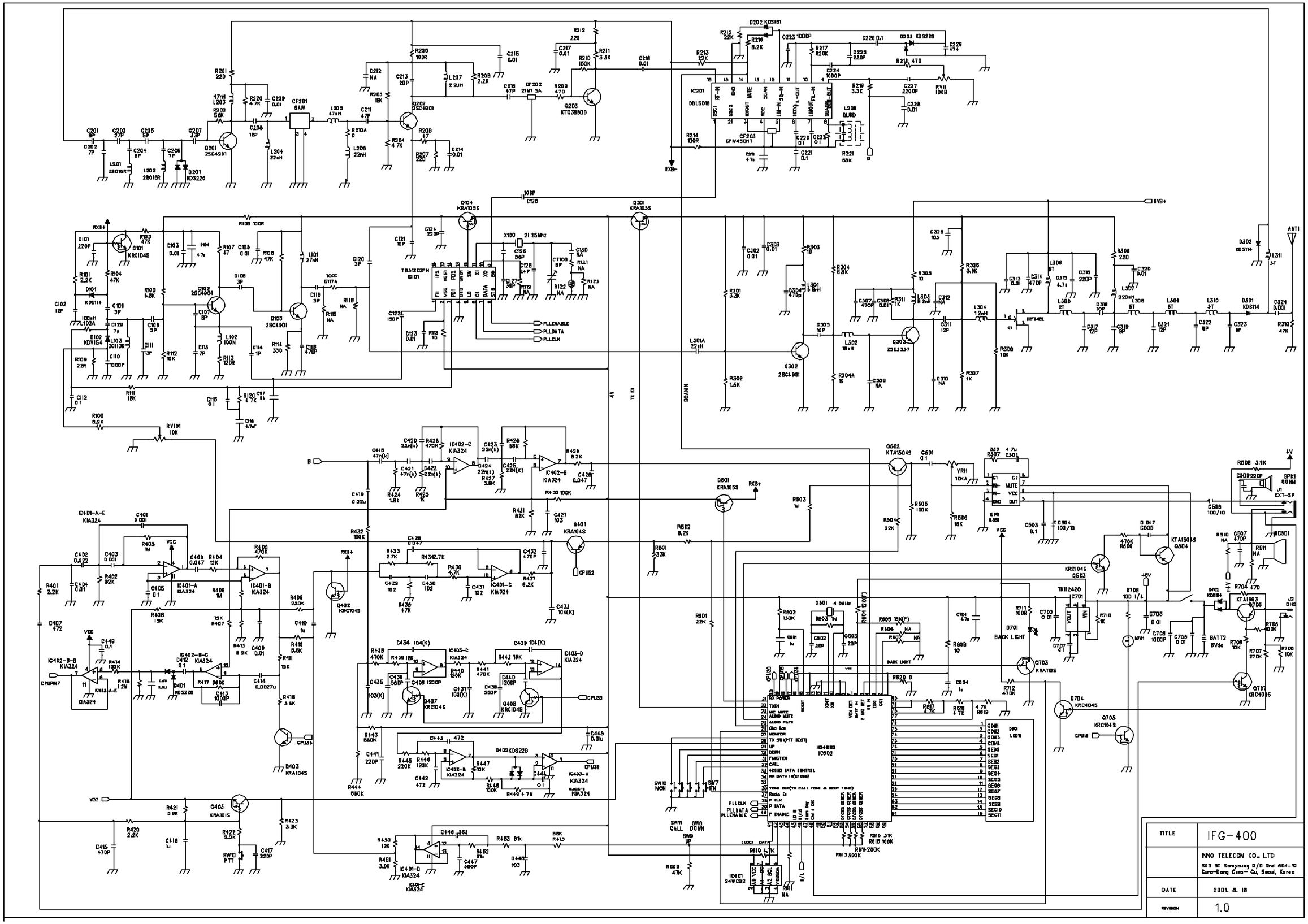
TITLE
IFG-400
INNO TELECON CO., LTD
DATE
2001. 8. 18
REVISION
1.0