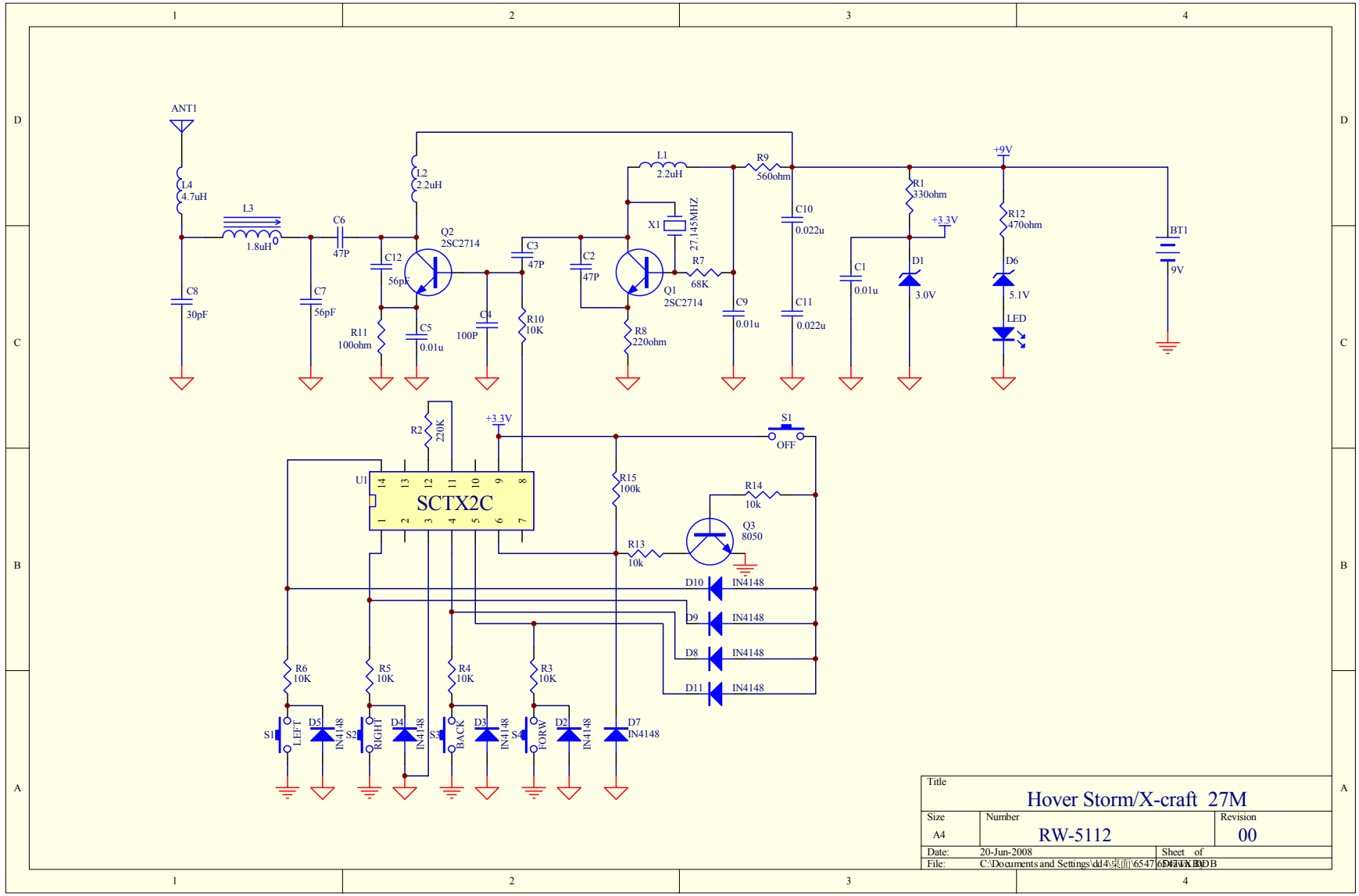

Title	Hover Storm/X-craft 27M	
Size A4	Number RW-5112	Revision 00
Date: 20-Jun-2008		Sheet of
File: C:\Documents and Settings\dd4\桌面\6547\6547V.DDB		