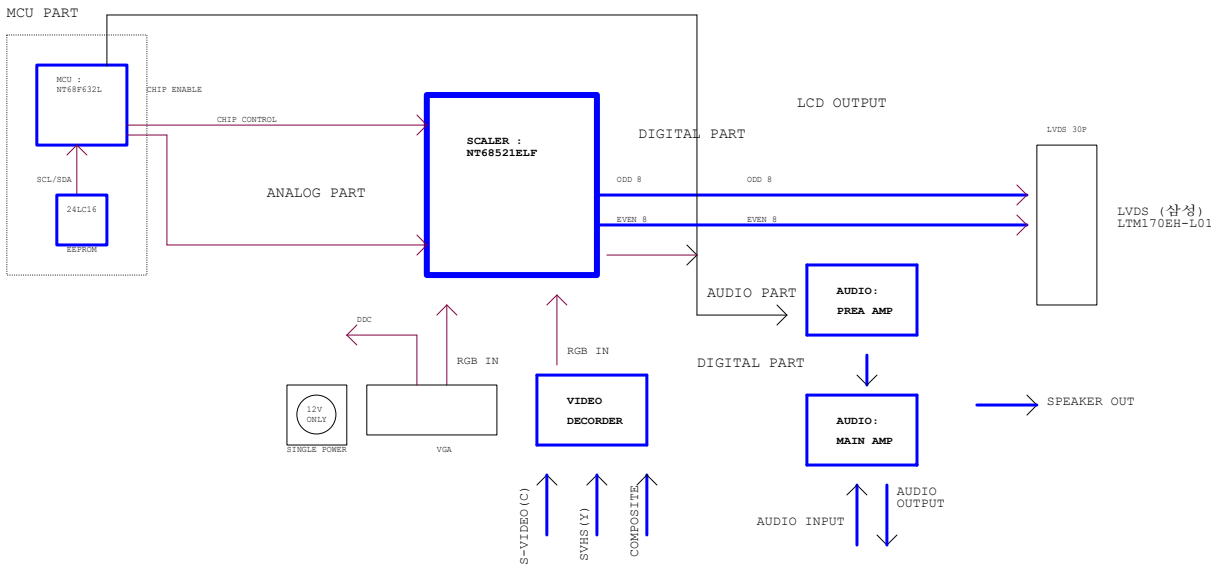
MCU PART
MCU :
NT68F632L
CHIP ENABLE
CHIP CONTROL
SCL/SDA
24LC16
EEPROM
ANALOG PART
SCALER :
NT68521ELF
DIGITAL PART
LCD OUTPUT
LVDS 30P
ODD 8
ODD 8
EVEN 8
EVEN 8
LVDS (삼성)
LTM170EH-L01
AUDIO PART
AUDIO:
PREA AMP
DDC
RGB IN
RGB IN
DIGITAL PART
12V
ONLY
SINGLE POWER
VGA
VIDEO
DECORDER
AUDIO:
MAIN AMP
SPEAKER OUT
S-VIDEO(C)
SVHS(Y)
COMPOSITE
AUDIO INPUT
AUDIO
OUTPUT

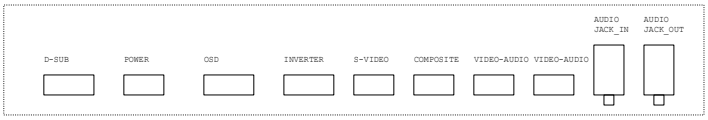
CONNECTOR
D-SUB
POWER
OSD
INVERTER
S-VIDEO
COMPOSITE
VIDEO-AUDIO
VIDEO-AUDIO
AUDIO
JACK_IN
AUDIO
JACK_OUT

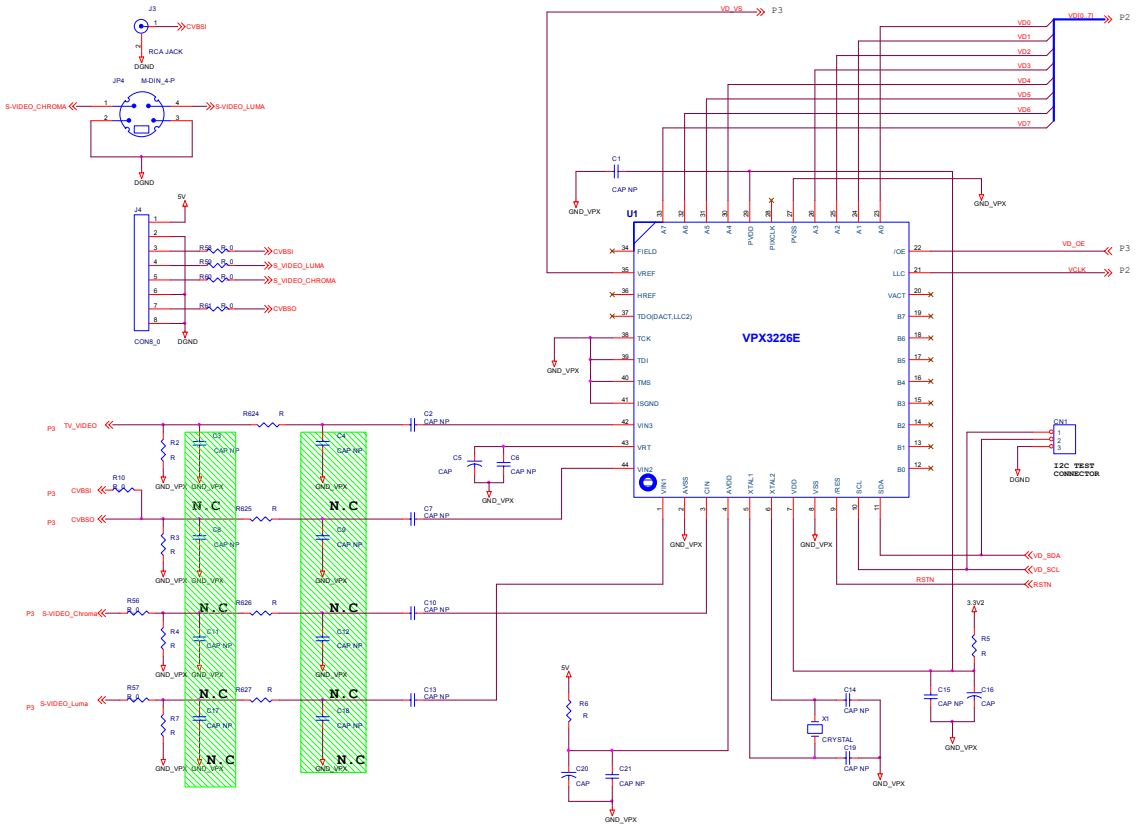
J3
CVBSI
RCA JACK
DGND
JP4
M-DIN_4-P
S-VIDEO_CHROMA
S-VIDEO_LUMA
DGND
J4
5V
R58 0
R59 0
R60 0
R61 0
CVBSI
S_VIDEO_LUMA
S_VIDEO_CHROMA
CVBSO
CON8_0
DGND
VD_VS
P3
VD0
VD1
VD2
VD3
VD4
VD5
VD6
VD7
VD[0..7]
P2
C1
CAP NP
GND_VPX
U1
VPX3226E
FIELD
VREF
HREF
TDO(DACT,LLC2)
TCK
TDI
TMS
ISGND
VIN3
VRT
VIN2
/OE
LLC
VACT
B7
B6
B5
B4
B3
B2
B1
B0
VD_OE
VCLK
P3
P2
TV_VIDEO
CVBSI
CVBSO
S-VIDEO_Chroma
S-VIDEO_Luma
R624
R625
R626
R627
R
C2
C3
C4
C5
C6
C7
C8
C9
C10
C11
C12
C13
C14
C15
C16
C17
C18
C19
C20
C21
CAP NP
CAP
N.C
CON1
I2C TEST CONNECTOR
DGND
VD_SDA
VD_SCL
RSTN
3.3V2
R5
R6
X1
CRYSTAL

N-SOFT

NST_NVT_15 1.0

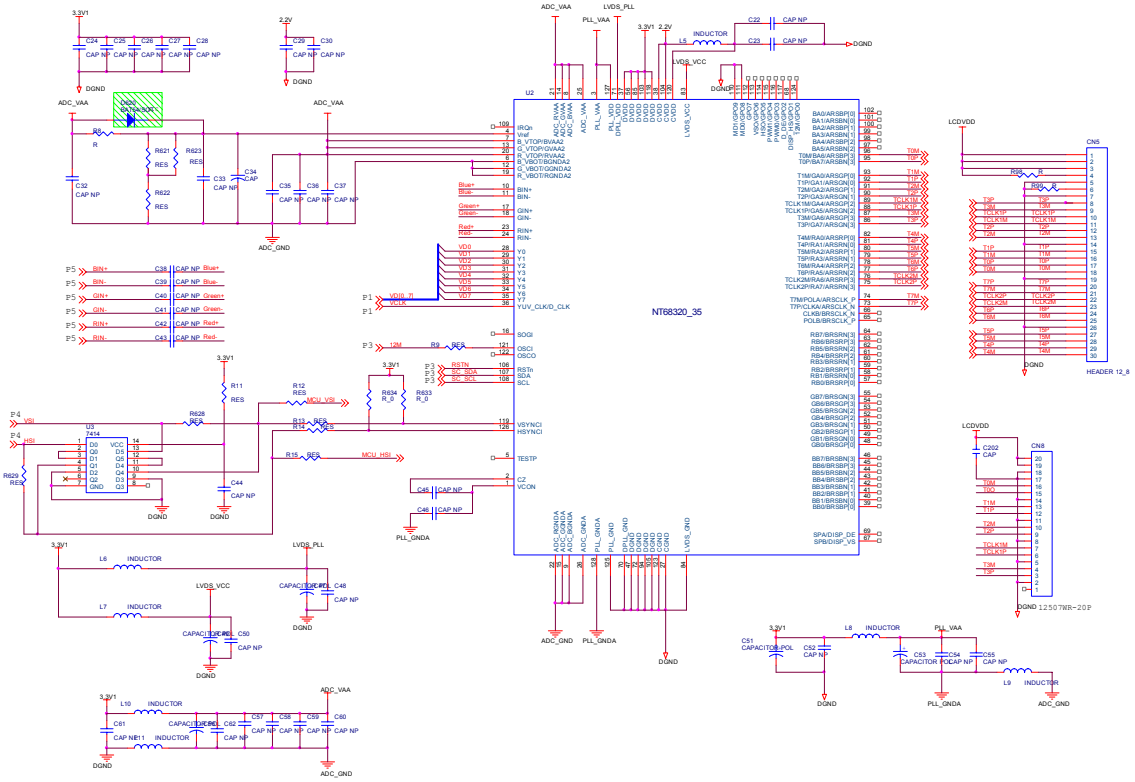

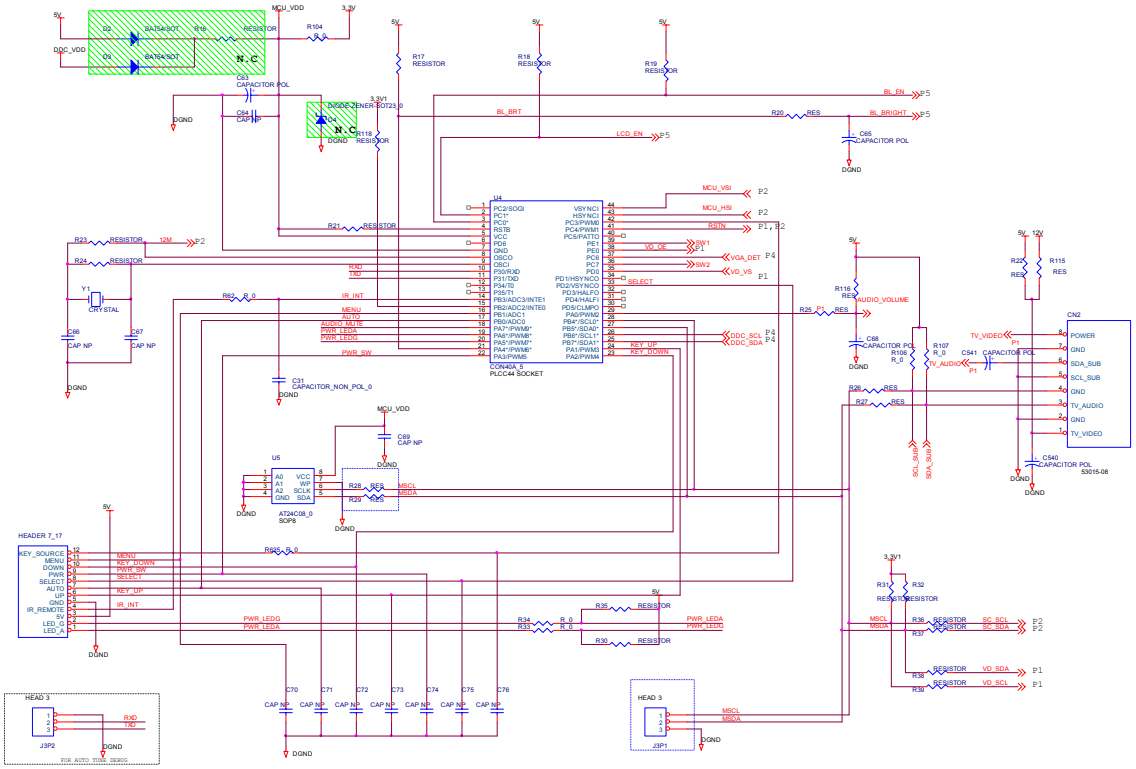
MCU_VDD
3.3V
5V
DDC_VDD
R104
R17 RESISTOR
R18 RESISTOR
R19 RESISTOR
C63 CAPACITOR POL
C64 CAP NP
DGND
3.3V1
DIODE ZENER-SOT23_0
R118 RESISTOR
BL_EN
BL_BRT
BL_BRIGHT
R20 RES
LCD_EN
C65 CAPACITOR POL
U4
PLCC44 SOCKET
MCU_VSI
MCU_HSI
RSTN
VD_OE
VGA_DET
VD_VS
SELECT
DDC_SCL
DDC_SDA
KEY_UP
KEY_DOWN
R23 RESISTOR 12M
R24 RESISTOR
R21 RESISTOR
Y1 CRYSTAL
C66 CAP NP
C67 CAP NP
R62 R_0
IR_INT
MENU
AUTO
AUDIO_MUTE
PWR_LEDA
PWR_LEDG
PWR_SW
C31 CAPACITOR_NON_POL_0
R116 RES
AUDIO_VOLUME
C68 CAPACITOR POL
R107 R_0
R106 R_0
TV_AUDIO
C541 CAPACITOR POL
R25 RES
R26 RES
R27 RES
SCL_SUB
SDA_SUB
R22 RES
R115 RES
CN2
TV_VIDEO
GND
SDA_SUB
SCL_SUB
GND
TV_AUDIO
GND
TV_VIDEO
C540 CAPACITOR POL 53015-08
U5
AT24C08_0 SOP8
C69 CAP NP
R28 RES
R29 RES
MSCL
MSDA
R65 R_0
HEADER 7_17
KEY_SOURCE
MENU
DOWN
PWR
SELECT
AUTO
UP
GND
IR_REMOTE
5V
LED_G
LED_A
R34 R_0
R33 R_0
R35 RESISTOR
R30 RESISTOR
R31 RESISTOR
R32 RESISTOR
R36 RESISTOR
R37 RESISTOR
SC_SCL
SC_SDA
R38 RESISTOR
R39 RESISTOR
VD_SDA
VD_SCL
C70 CAP NP
C71 CAP NP
C72 CAP NP
C73 CAP NP
C74 CAP NP
C75 CAP NP
C76 CAP NP
HEAD 3
JSP2
FOR AUTO TUNE DEBUG
JSP1

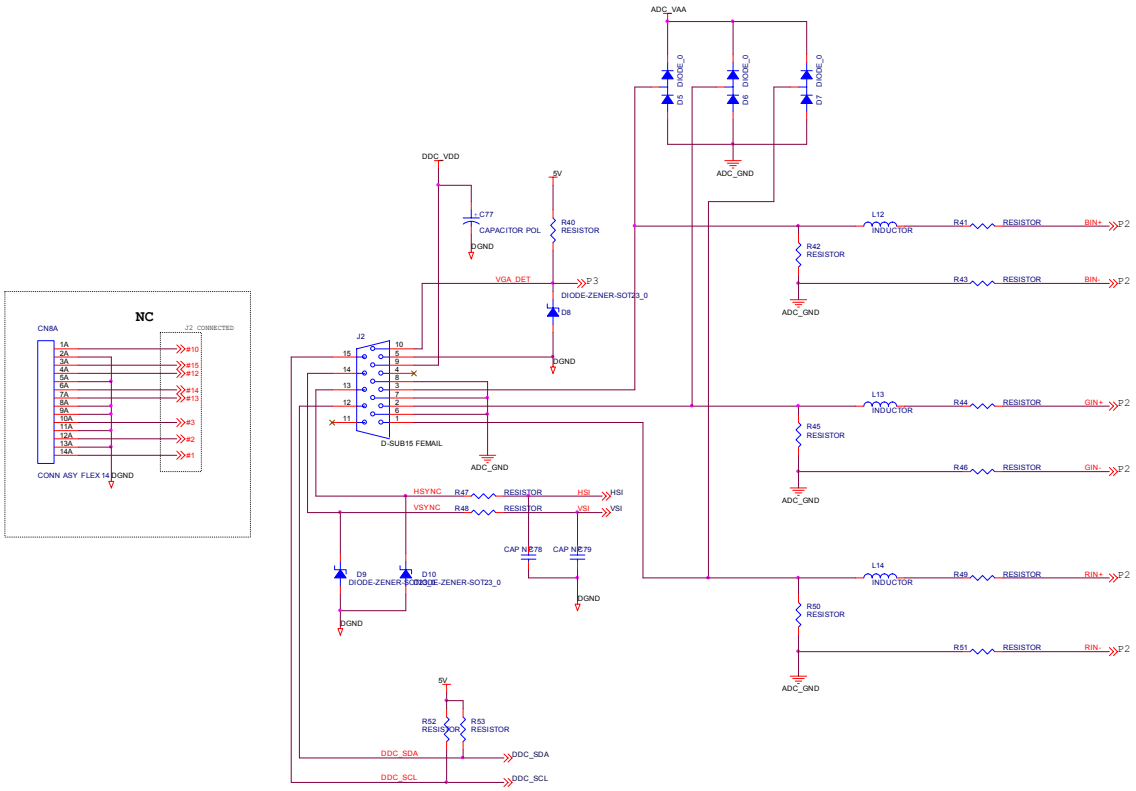
NC
CN8A
J2 CONNECTED
CONN ASY FLEX 14
DGND
ADC_VAA
DIODE_0
D5
D6
D7
ADC_GND
DDC_VDD
5V
C77
CAPACITOR POL
R40
RESISTOR
VGA_DET
P3
DIODE-ZENER-SOT23_0
D8
J2
D-SUB15 FEMAIL
HSYNC
VSYNC
R47
R48
HSI
VSI
CAP NP278
CAP NP279
D9
D10
R52
R53
DDC_SDA
DDC_SCL
L12
L13
L14
INDUCTOR
R41
R42
R43
R44
R45
R46
R49
R50
R51
BIN+
BIN-
GIN+
GIN-
RIN+
RIN-
P2

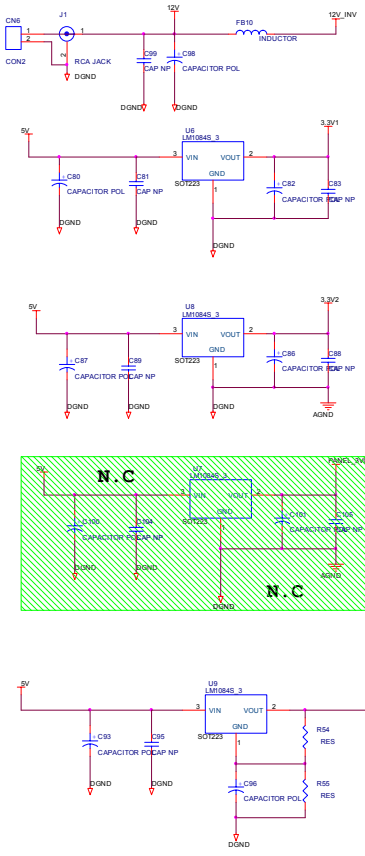

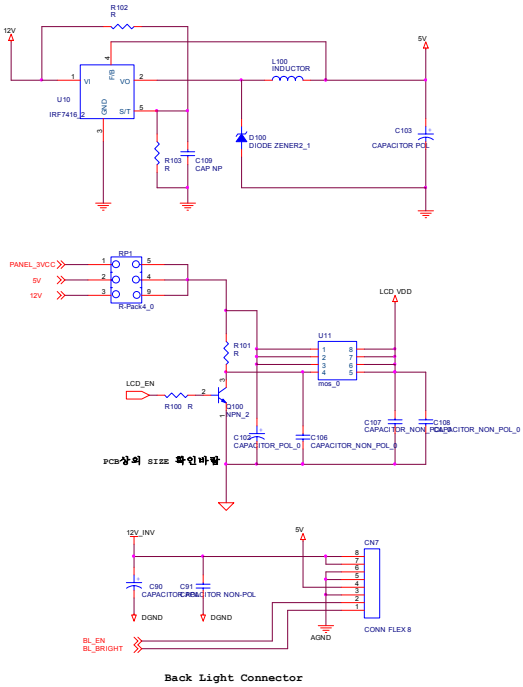

Back Light Connector

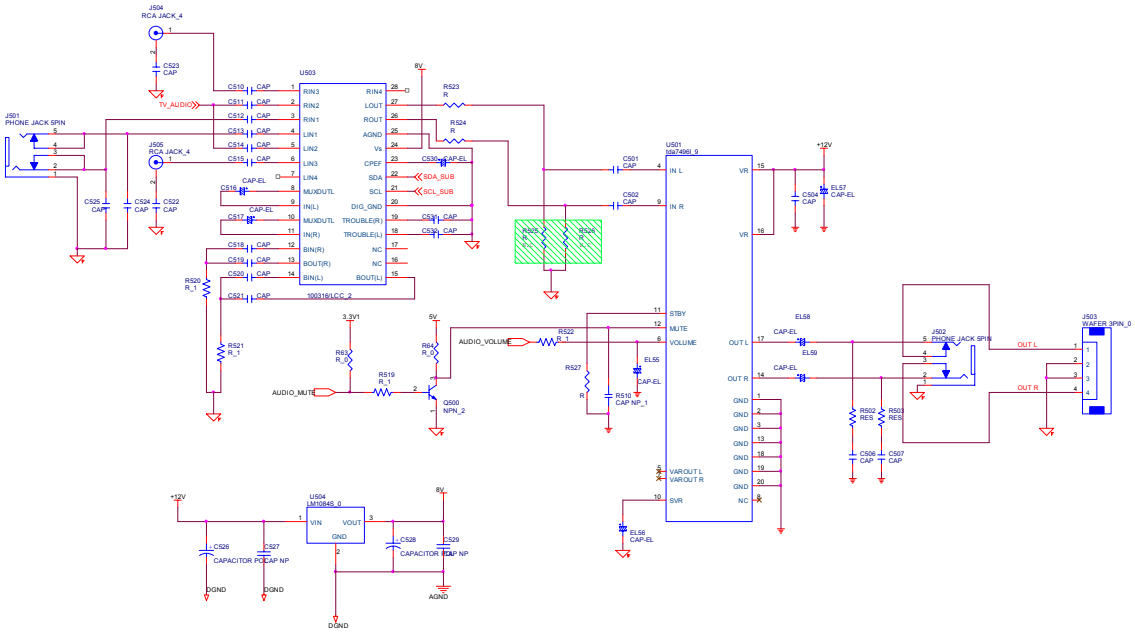
J504
RCA_JACK_4
C523
CAP
TV_AUDIO
J501
PHONE_JACK 5PIN
J505
RCA_JACK_4
C525
CAP
C524
CAP
C522
CAP
U503
RIN3
RIN2
RIN1
LIN1
LIN2
LIN3
LIN4
MUXOUTL
IN(L)
MUXOUTL
IN(R)
BIN(R)
BOUT(R)
BIN(L)
RIN4
LOUT
ROUT
AGND
Vs
CPEF
SDA
SCL
DIG_GND
TROUBLE(R)
TROUBLE(L)
NC
NC
BOUT(L)
100318VLCC_2
C510
C511
C512
C513
C514
C515
C516
C517
C518
C519
C520
C521
CAP
CAP-EL
R520
R_1
R521
R_1
8V
R523
R
R524
R
C530
CAP-EL
SDA_SUB
SCL_SUB
C531
C532
CAP
3.3V1
R63
R_0
5V
R64
R_0
R519
R_1
AUDIO_MUTE
Q500
NPN_2
AUDIO_VOLUME
R522
R_1
R527
R
C501
C502
CAP
U501
tda7498l_9
IN L
IN R
STBY
MUTE
VOLUME
VARCOUT L
VARCOUT R
SVR
VR
VR
GND
GND
GND
GND
GND
GND
GND
GND
NC
OUT L
OUT R
+12V
C504
CAP
EL57
CAP-EL
EL58
CAP-EL
EL59
CAP-EL
EL55
CAP-EL
R510
CAP NP_1
EL56
CAP-EL
J502
5_PHONE_JACK 5PIN
J503
WAFER_3PIN_0
OUT L
OUT R
R502
RES
R503
RES
C506
CAP
C507
CAP
+12V
U504
LM1084S_0
VIN
VOUT
GND
C526
CAPACITOR POL
C527
CAP NP
C528
CAPACITOR POL
C529
CAP NP
DGND
DGND
DGND
AGND