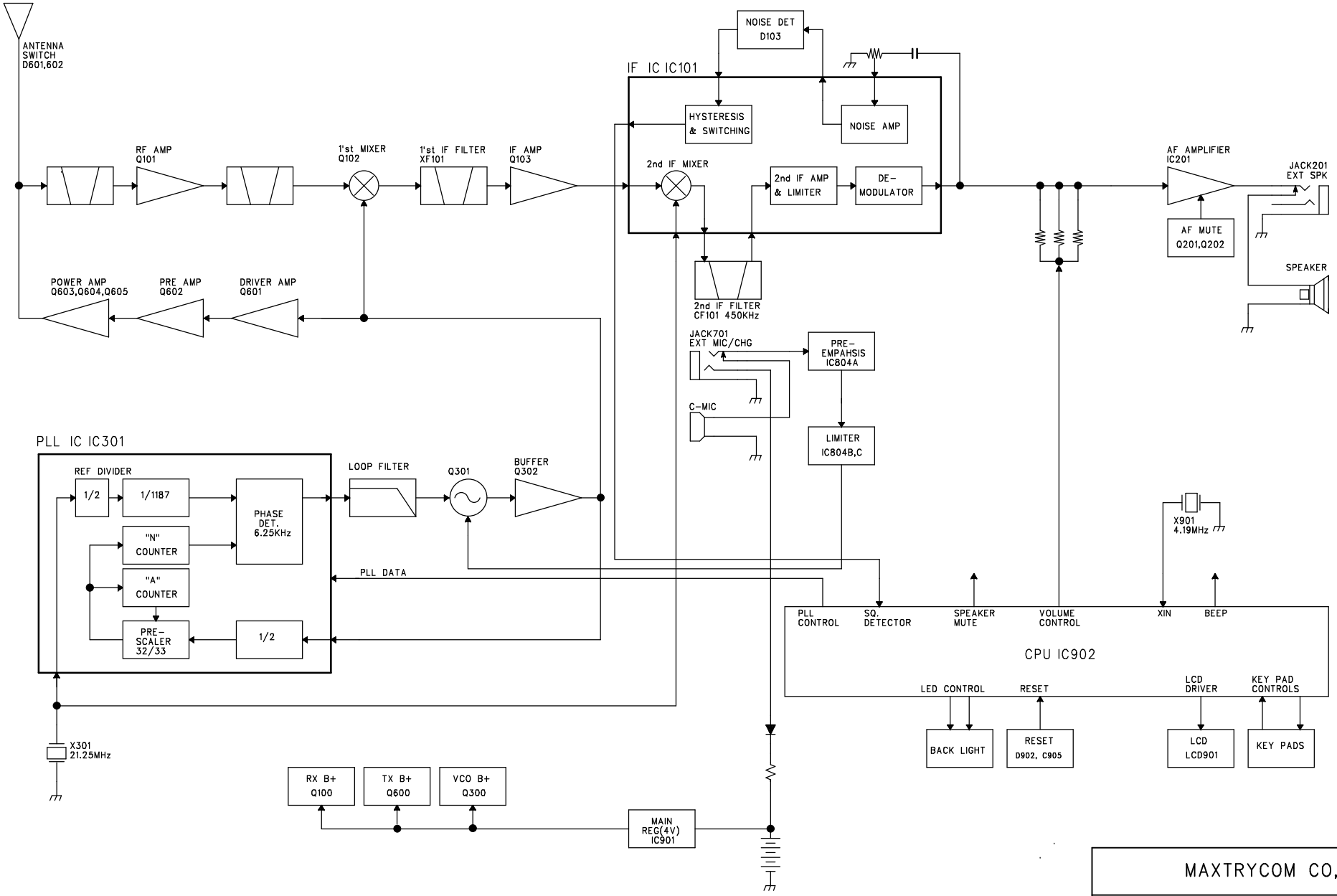

MAXTRYCOM CO,.LTD.				
TITLE : BM-1010(BLOCK DIAGRAM)				
DRAWN	CHECKED	CHECKED	APPROVED	SHEET
S.H.KWON				1 OF 1
				REV
2001.4.7.				01