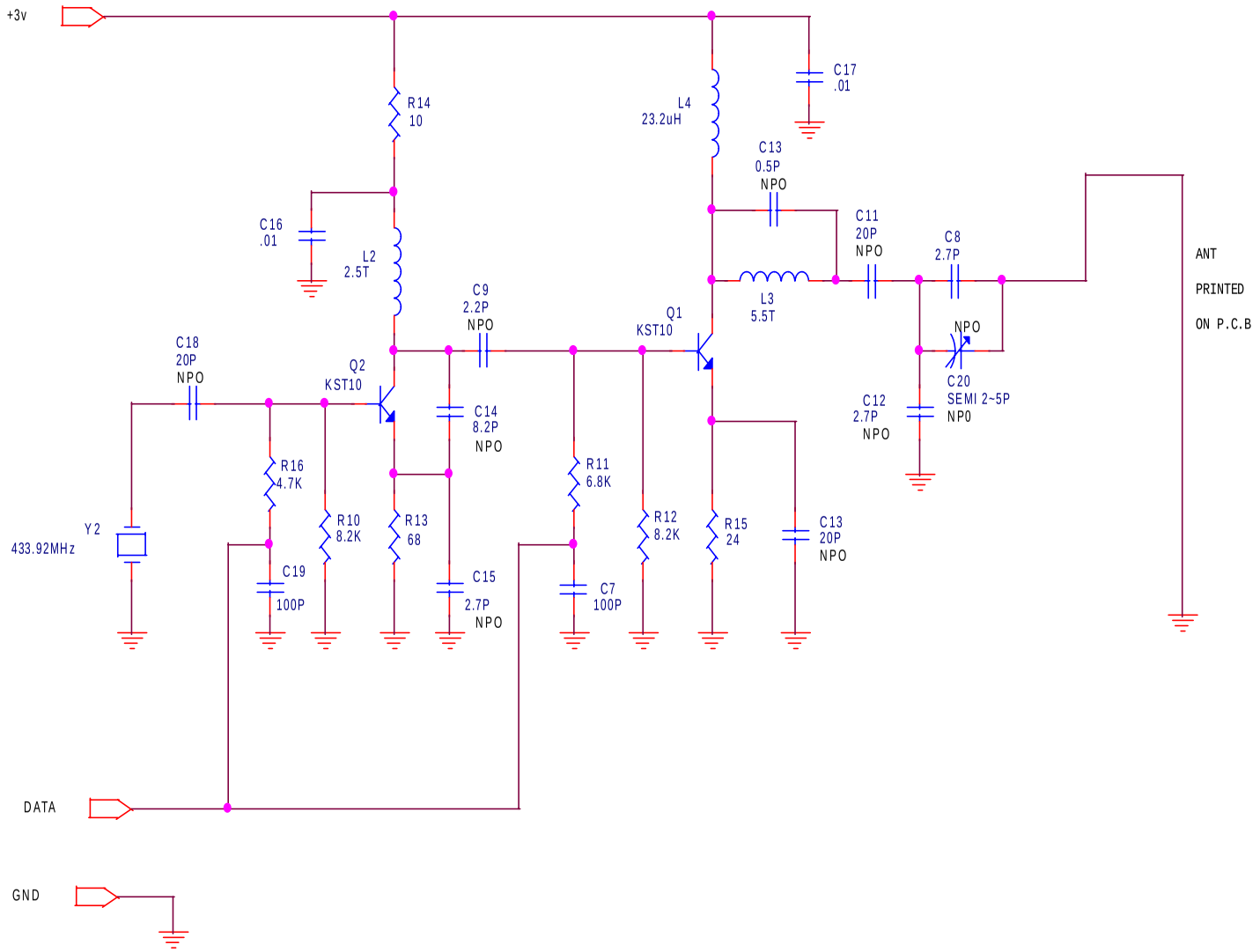

MANDOLYN ELECTRONIC TECHNOLOGY INC.	
Title	RT201/WS260 TRANSMITTER 433MHZ
Size A	Document Number RT201RF PCB
Date: Thursday, March 01, 2001	Sheet 1 of 0

RT201RF.SCH