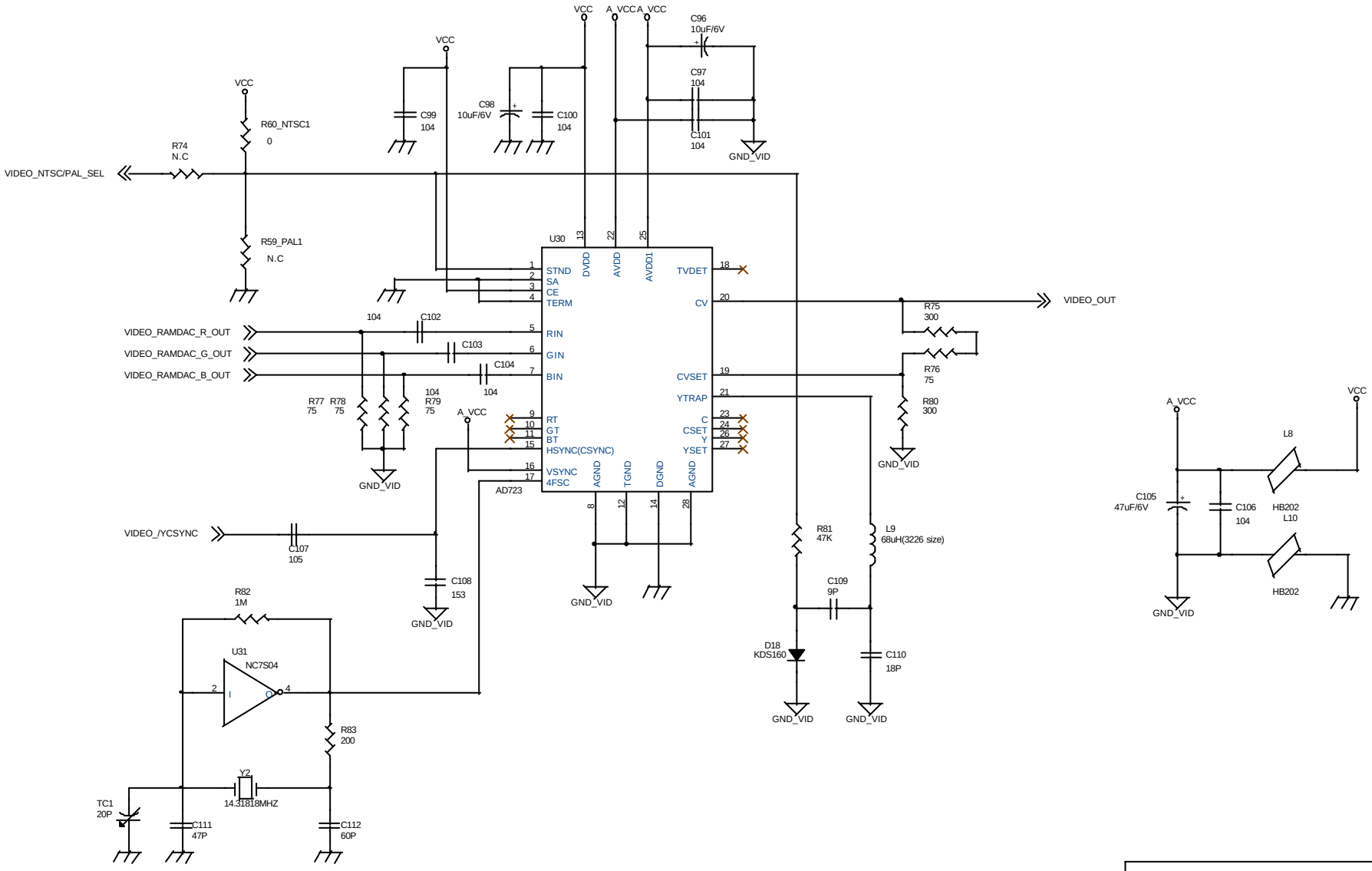

Title	VIDEO_AD723	
Size B	Document Number <Doc>	Rev 1.0
Date: Friday, July 25, 2003	Sheet 1 of 1	