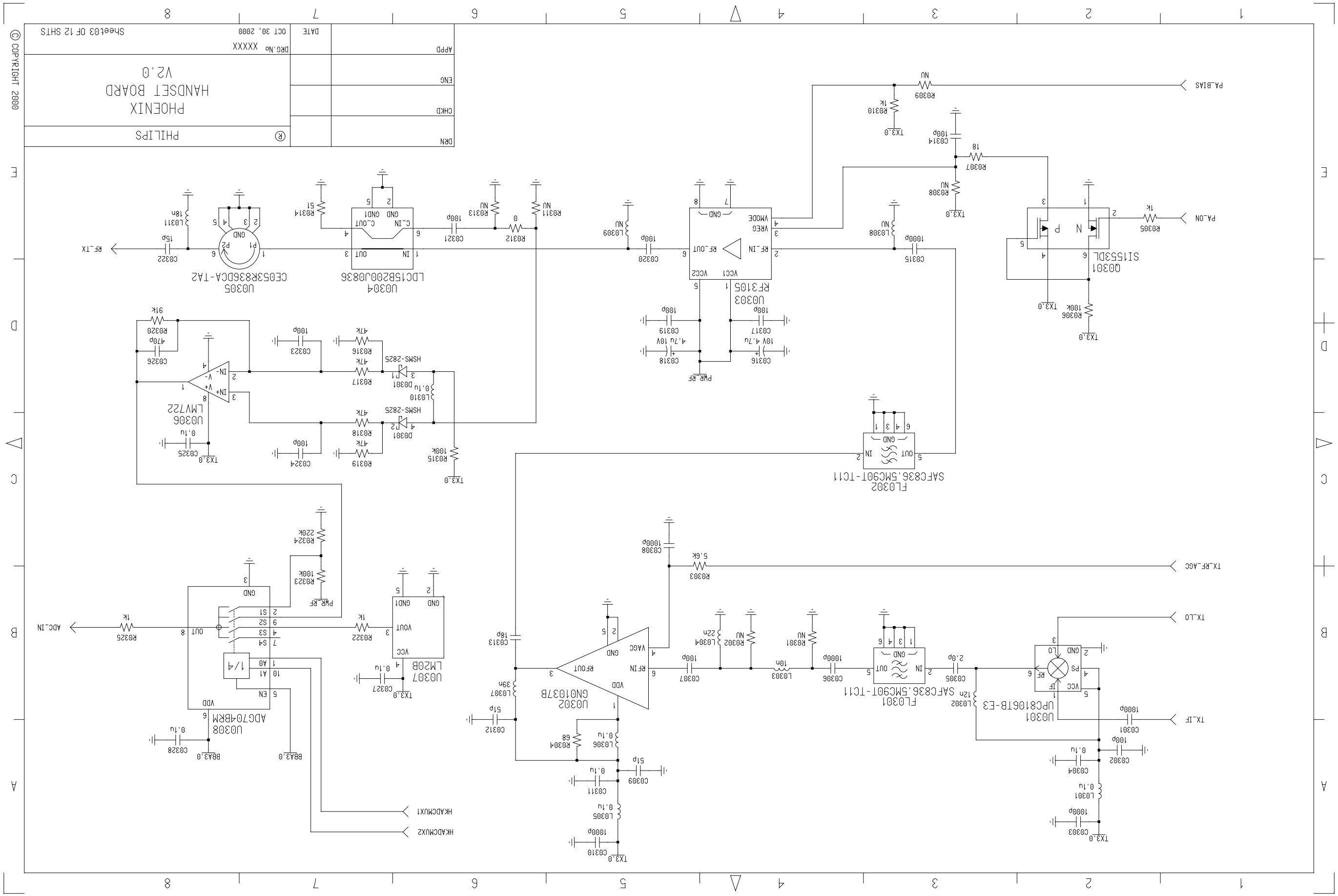
PHILIPS
PHOENIX
HANDSET BOARD
V2.0
DRN
CHKD
ENG
APPD
DRG.No XXXXX
DATE
OCT 30, 2000
Sheet03 OF 12 SHTS
© COPYRIGHT 2000
PA_ON
PA_BIAS
TX_RF_AGC
TX_LO
TX_IF
RF_TX
ADC_IN
HKADCMUX1
HKADCMUX2
Q0301
SI1553DL
U0303
RF3105
U0304
LDC15B200U0836
U0305
CE053R836DCA-TA2
U0306
LMV722
U0307
LM208
U0308
ADG704BRM
U0302
GN01037B
FL0301
SAFC836.5MC90T-TC11
U0301
UPC8106TB-E3
FL0302
SAFC836.5MC90T-TC11