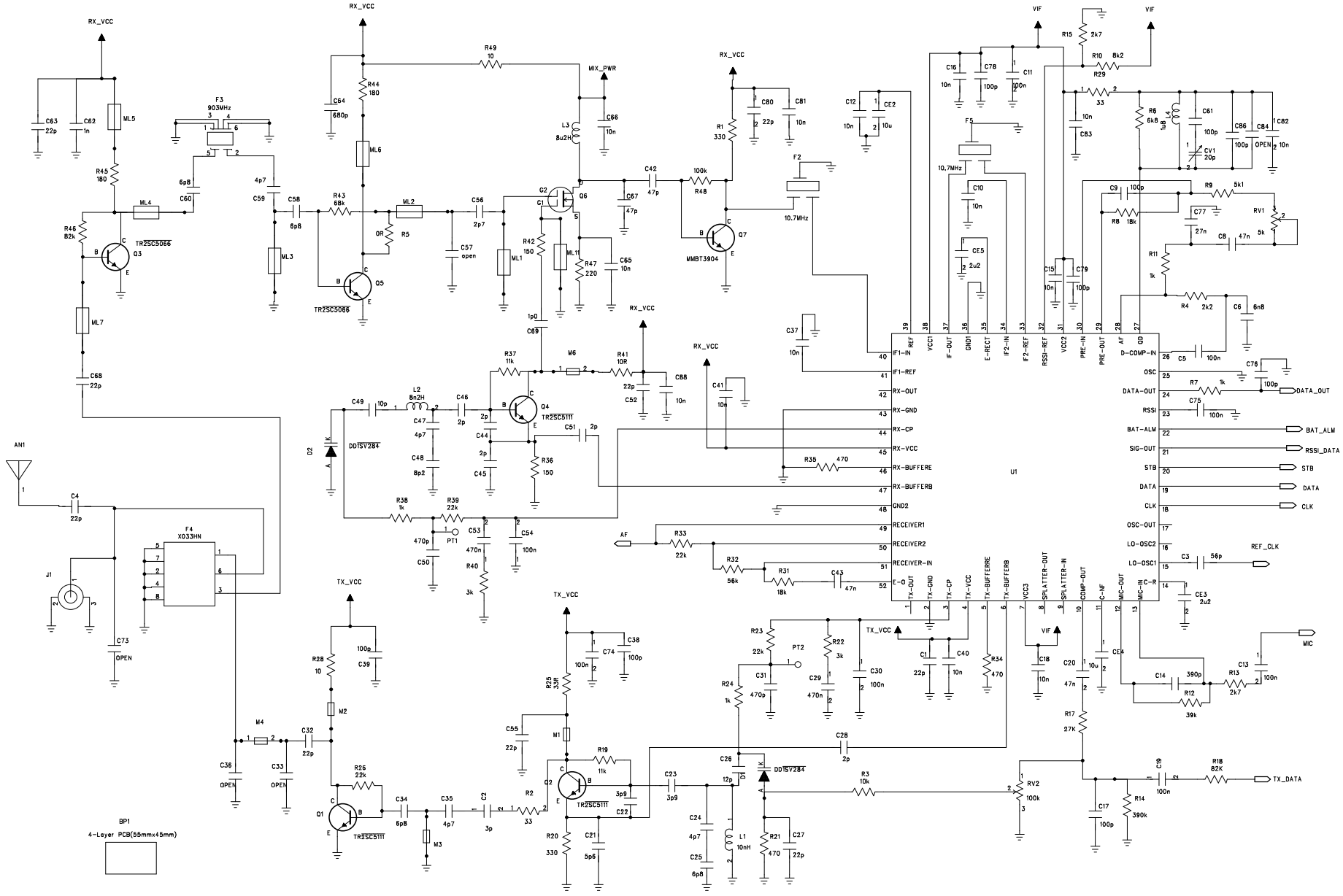

HANDSET RF SCHEMATIC DIAGRAM

Source: A005r08hs.sch

A005r08hs.pdf