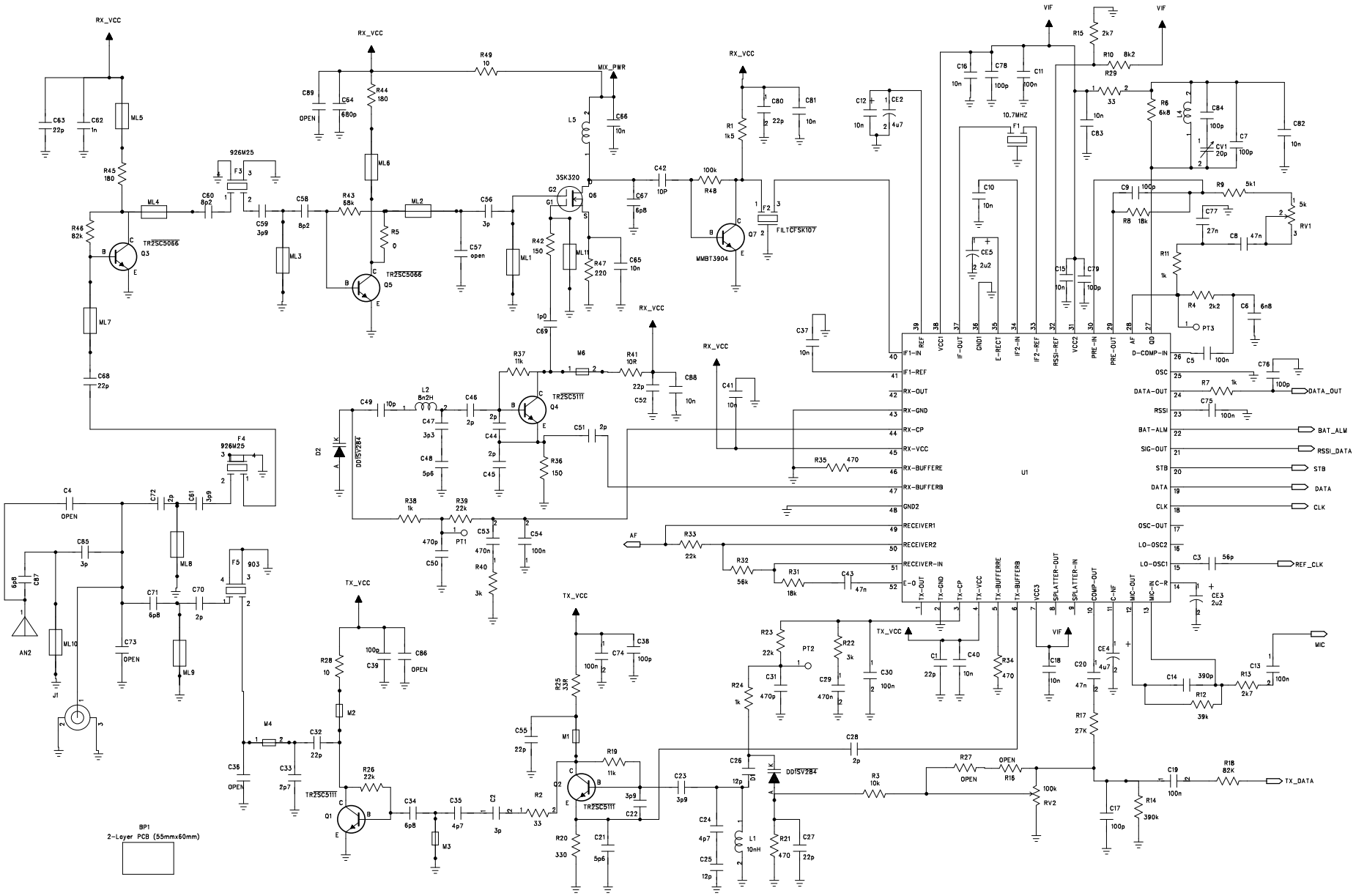

BASE UNIT RF SCHEMATIC DIAGRAM

Source: A005r08bs.sch

A005r08bs.pdf