5. Marking location and layout

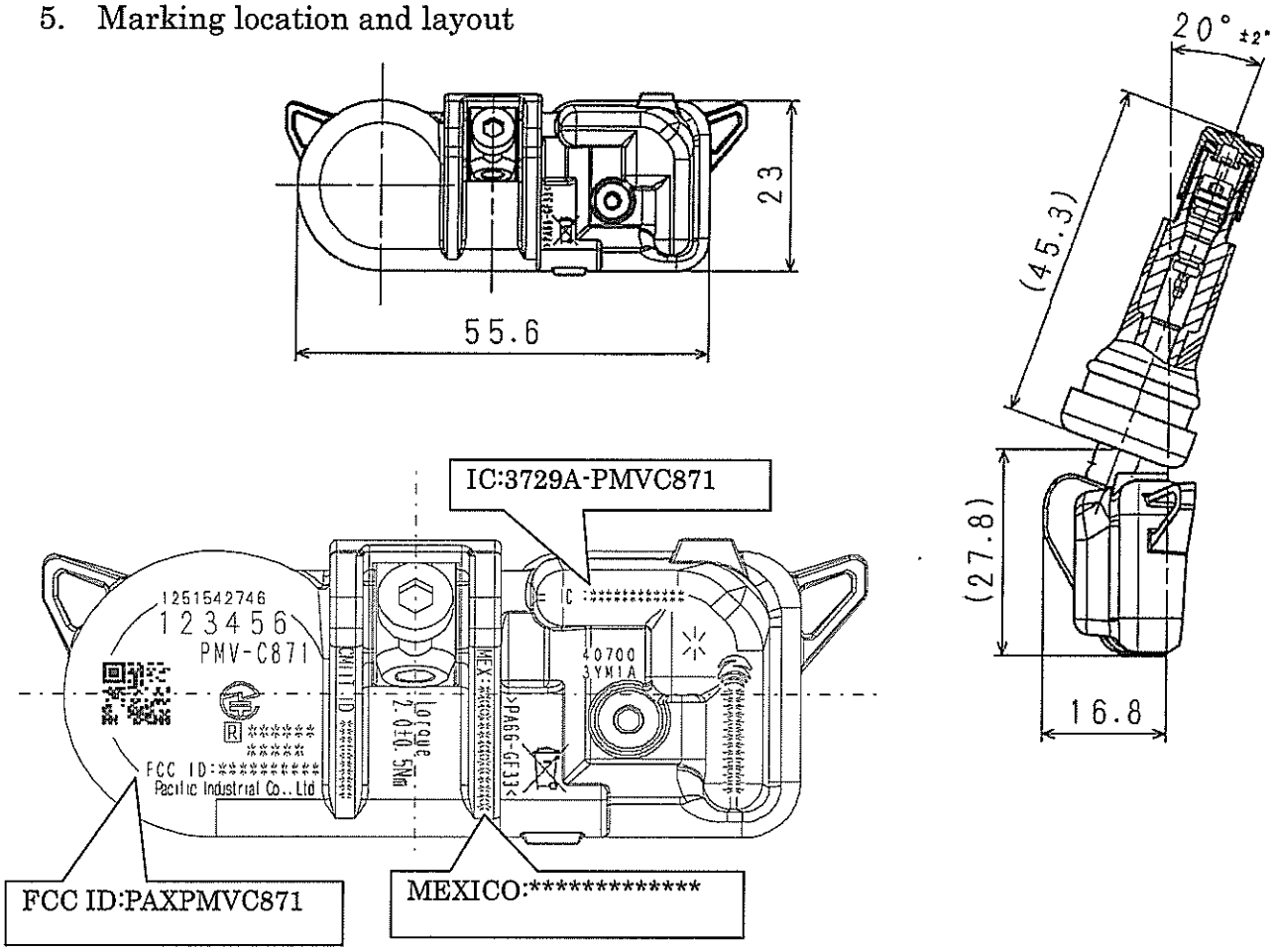

Fig 5. Marking location and dimension

Note:

- Compliance statement of marking will not be changed.
- Marking layout and size may be changed.