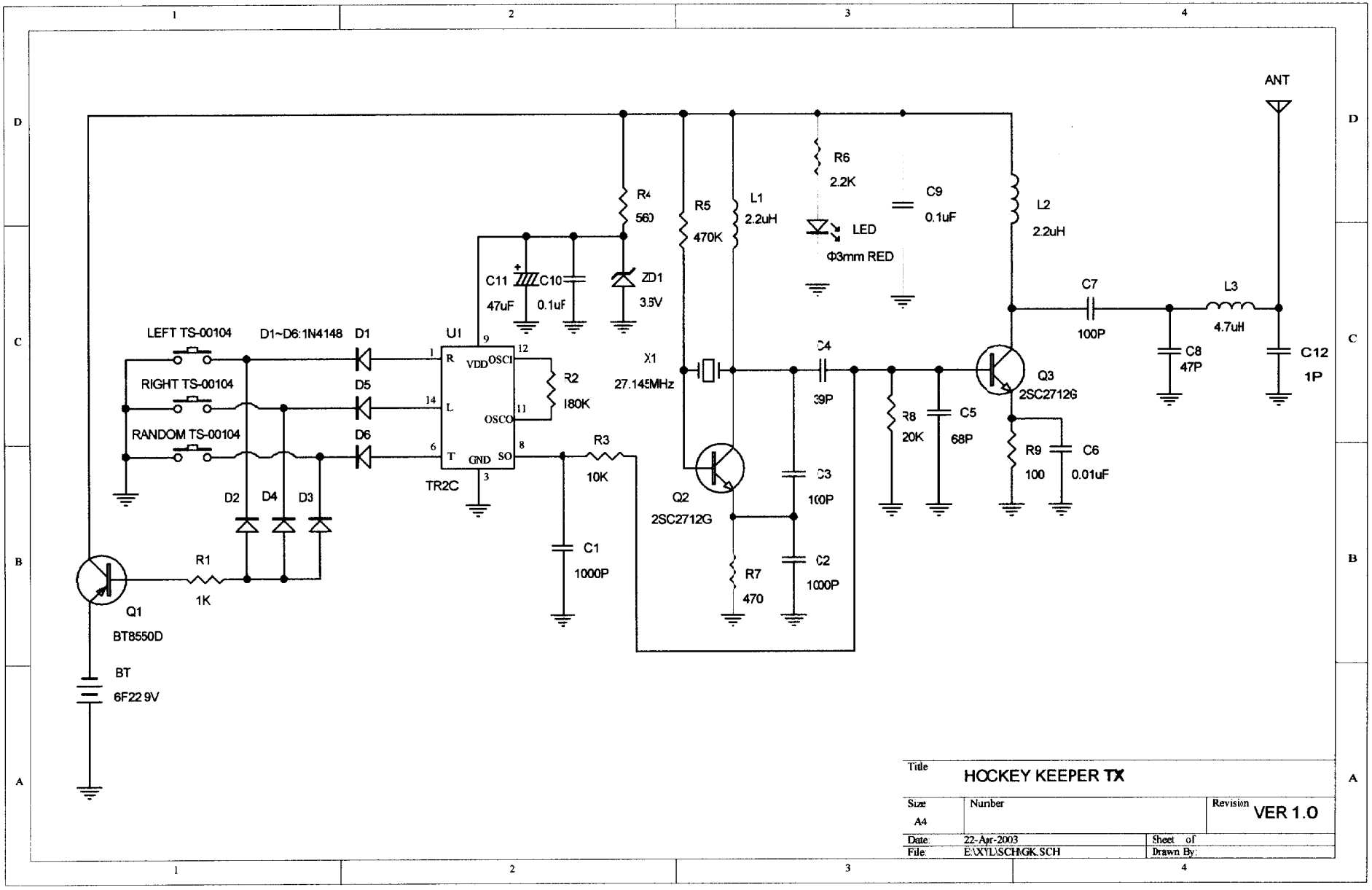

Title	HOCKEY KEEPER TX		
Size A4	Number		Revision VER 1.0
Date:	22-Apr-2003	Sheet of	
File:	E:\XYL\SCH\GK.SCH	Drawn By:	