# Block Diagram for UFD + Bluetooth Products.

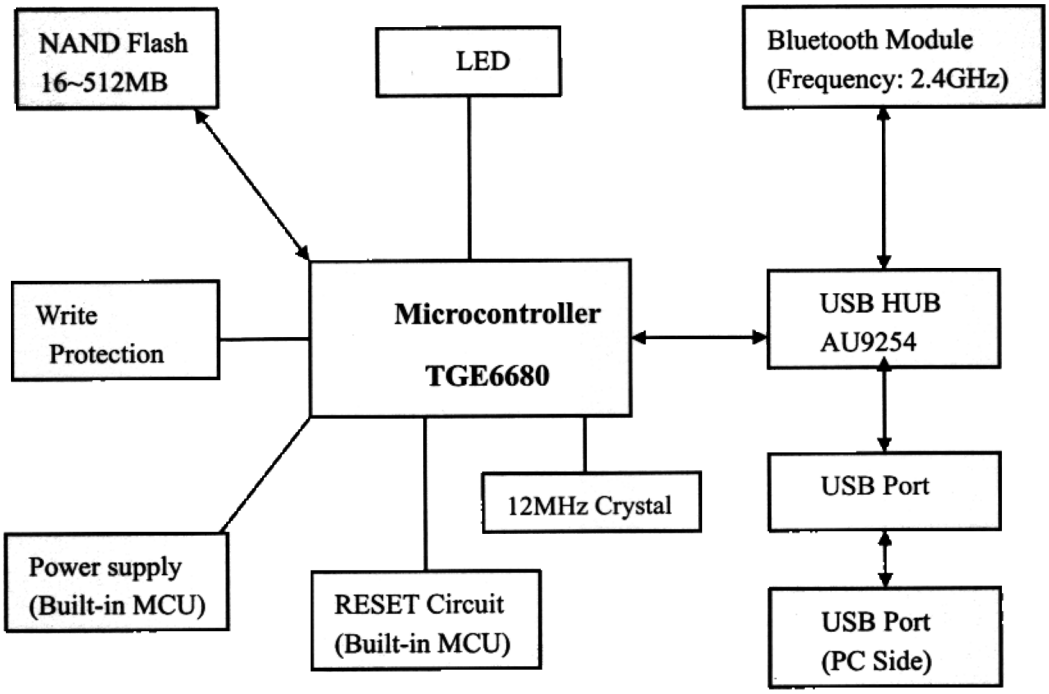

# UGPZ2 Block Diagram

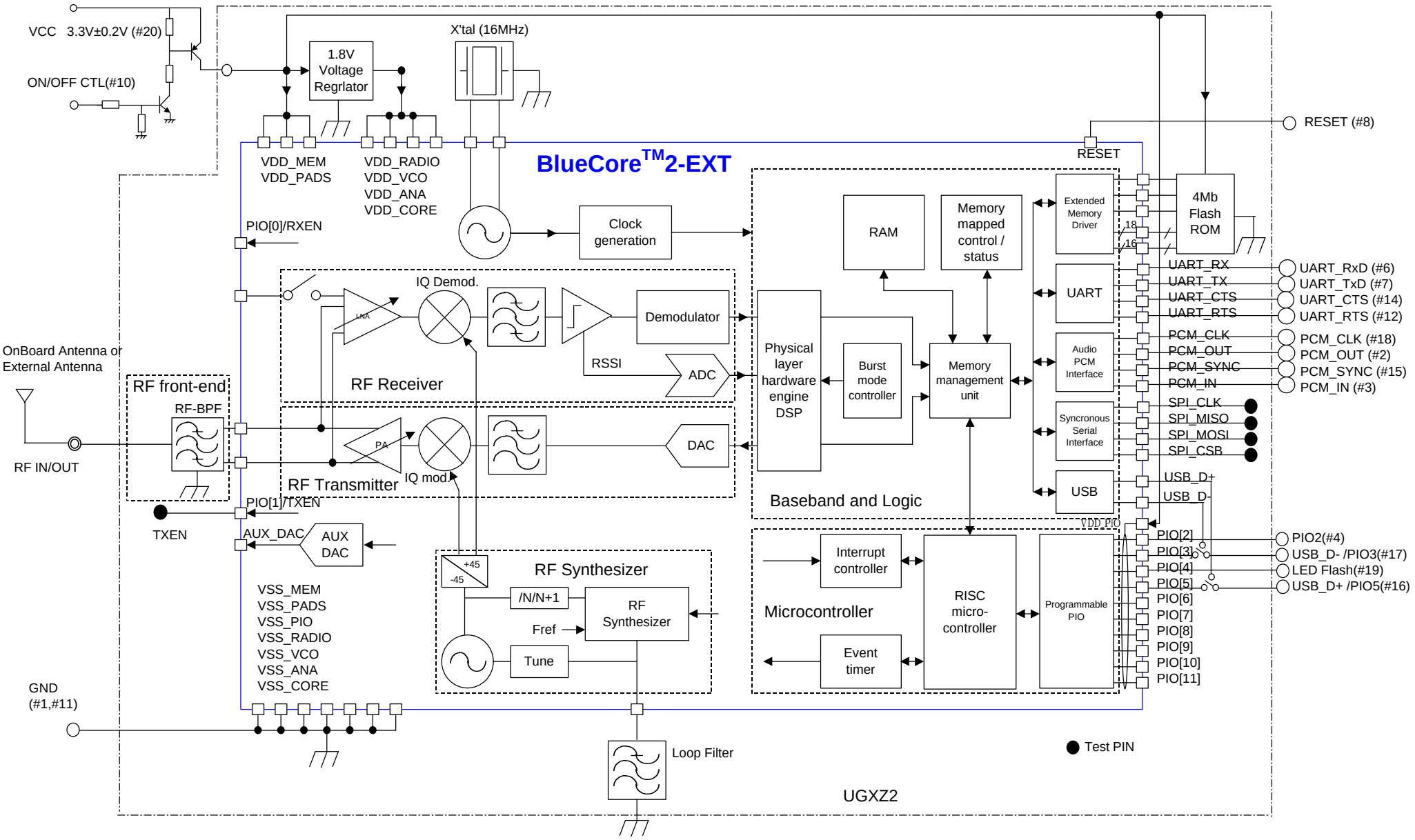


**ALPS PROPRIETARY INFORMATION CONFIDENTIAL REQUESTED**
**Copyright(c) 2002 ALPS Electric Co., Ltd.**