5/8

D	C	B	A	NO.	DESCRIPTION	PART NO.	MATERIAL	Q'TY	SURFACE TREATMENT	REMARK
					PCB ASS'Y DIAGRAM			·		·

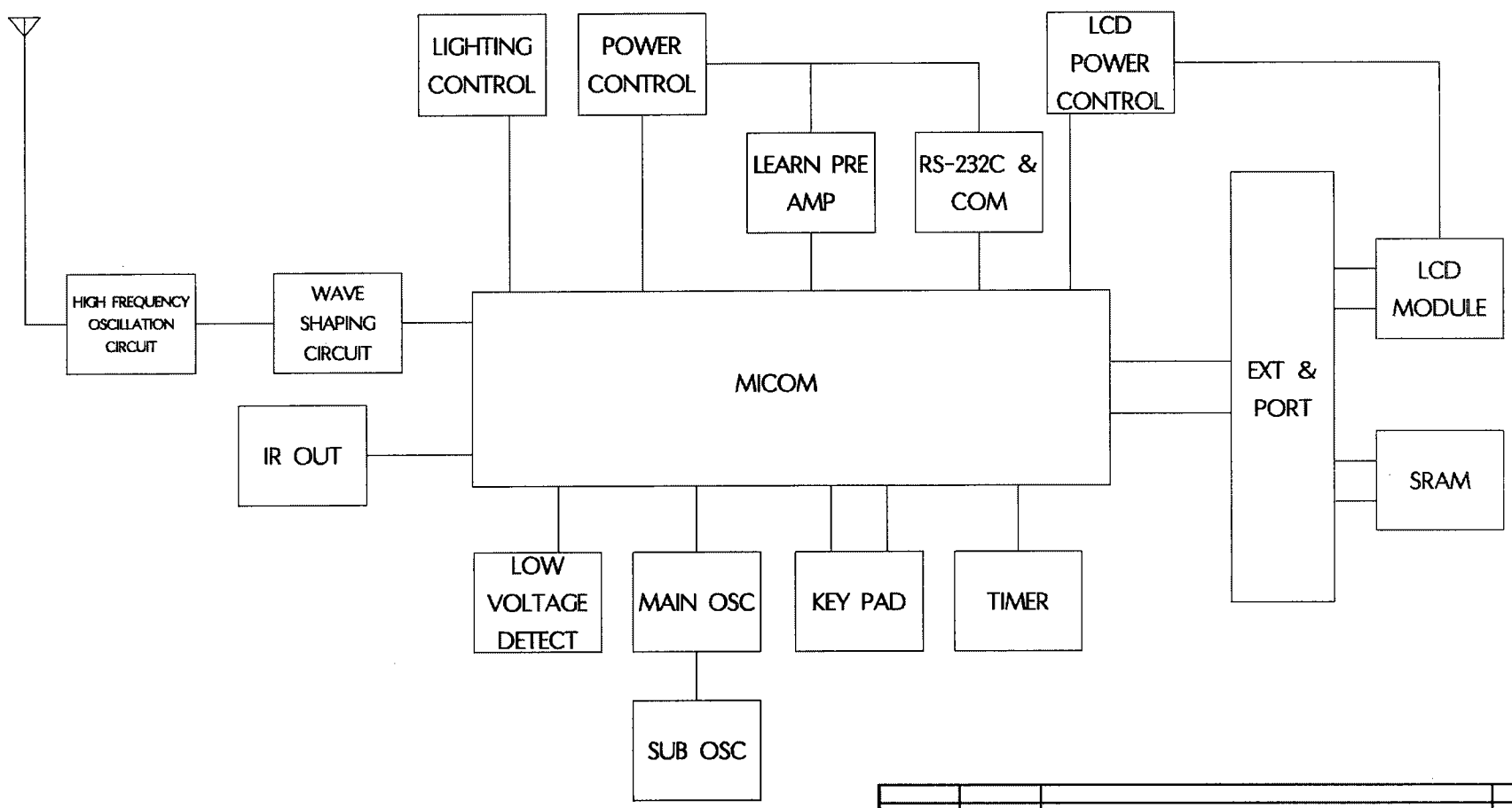

DATE	AUTHORIZED	CHANGED DETAILS	CHANGED BASIS

SCALE	UNIT mm	LIMIT ±0.1	DESC-RIPTION	BLOCK DIAGRAM	
Drafter	Checked	Approved			
S. G RYU			MODEL NAME	MX-700UHF (수신부)	
03. 06. 02					
OH SUNG ELECTRONICS CO., LTD.	REF. NO.	COMPO	P/NO.		
	STOCK NO.	MX-700UHF			