D	C	B	A	NO.	DESCRIPTION	PART NO.	MATERIAL	Q'TY	SURFACE TREATMENT	REMARK
					BLOCK DIAGRAM			-		-

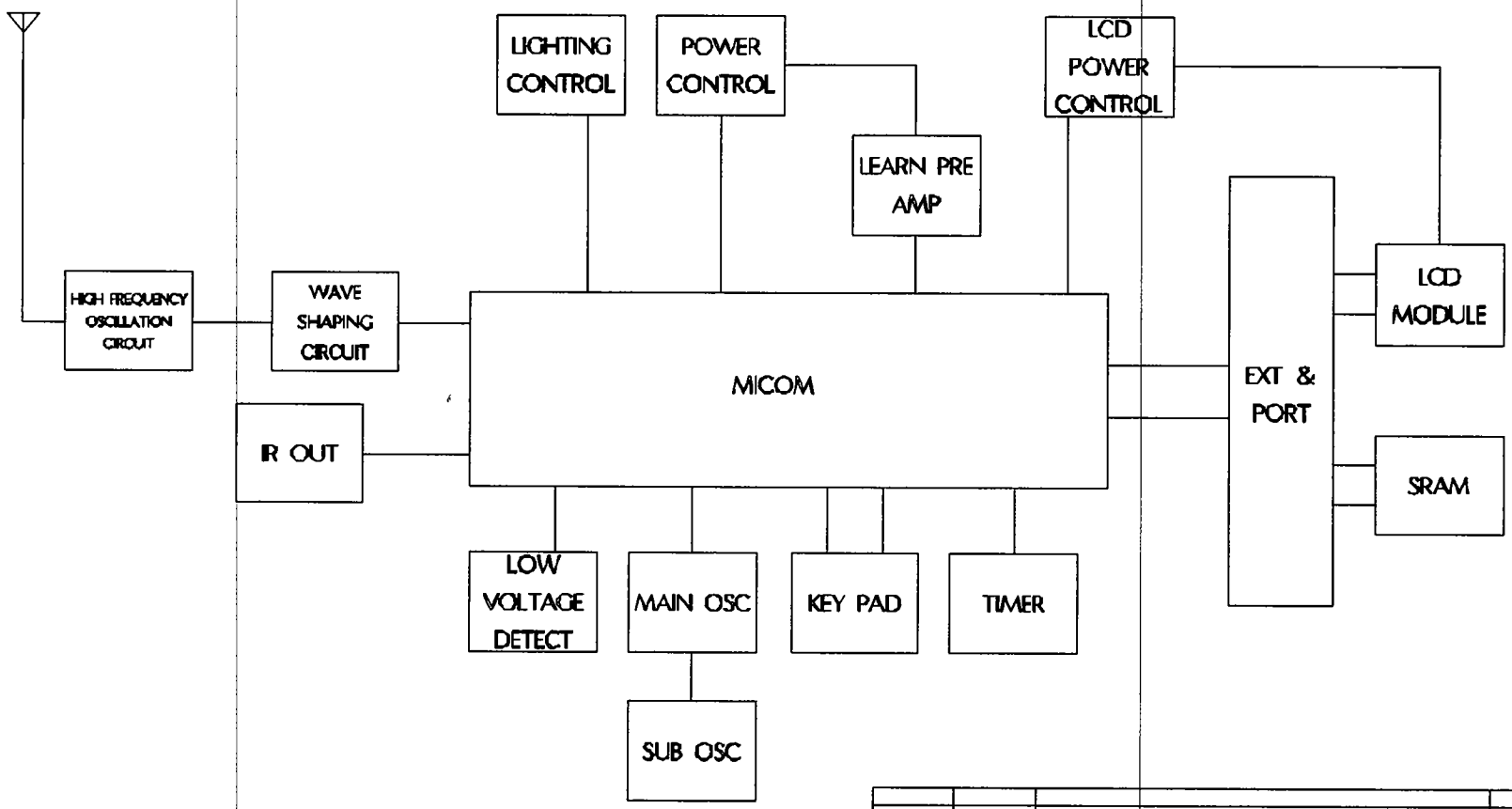

DATE	AUTHORIZED	CHANGED DETAILS	CHANGED BASIS

SCALE		UNIT	mm	UNIT	±0.1
Drafter	Checked	Approved		DESCRIPTION	BLOCK DIAGRAM
S. G RYU				MODEL NAME	URC-100
06. 01. 03					

OH SUNG ELECTRONICS CO., LTD. | REF. NO. | STOCK NO. | COMPO | P/NO.