USED ON:

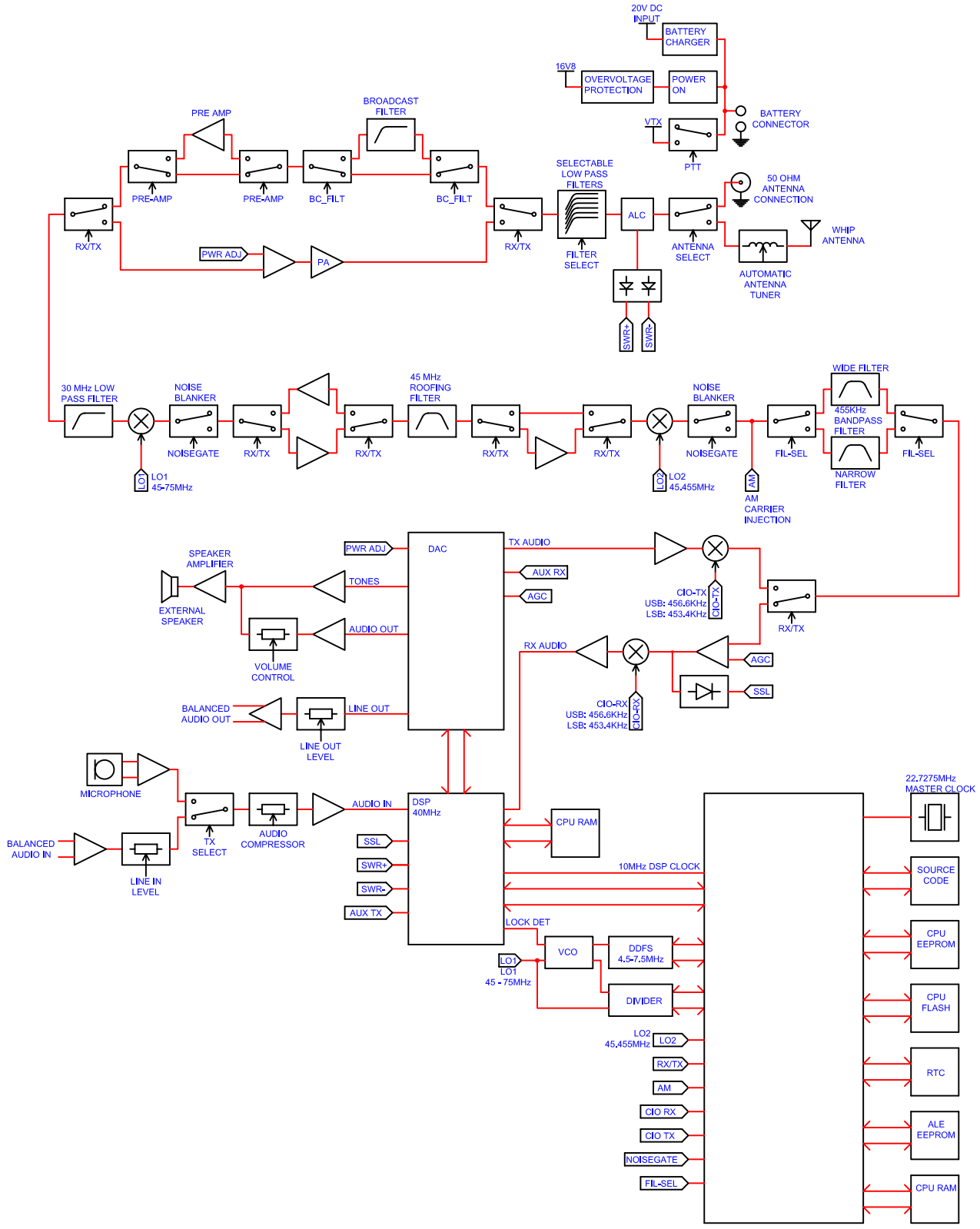

HOLE SCHEDULE		
LTR	DESCRIPTION	QTY

REVISIONS					
No	ECN	DATE	DRAWN	ISSUED	REMARKS

DIMENSIONS IN mm

GENERAL TOLERANCES:
WHOLE DIMS: +/-0.25mm
1 DEC PLACE: +/- 0.2mm
ANG: +/-1 deg
UNLESS OTHERWISE STATED

MATERIAL:

FINISH:

DESIGNED MDP

DRAWN MDP

DATE 17 Oct 06

SCALE

ISSUED

ISSUED DATE

BARRETT COMMUNICATIONS PTY LTD
8 Port Kembla Drive
Bibra Lake
WESTERN AUSTRALIA 6153
Tel: (618) 9434 1700 Fax: (618) 9418 6757

TITLE
2040 Block Diagram

DRAWING No. 2040D60-A0

REVISION A0

BARRETT PART No

SHEET OF

ORIG SIZE A3