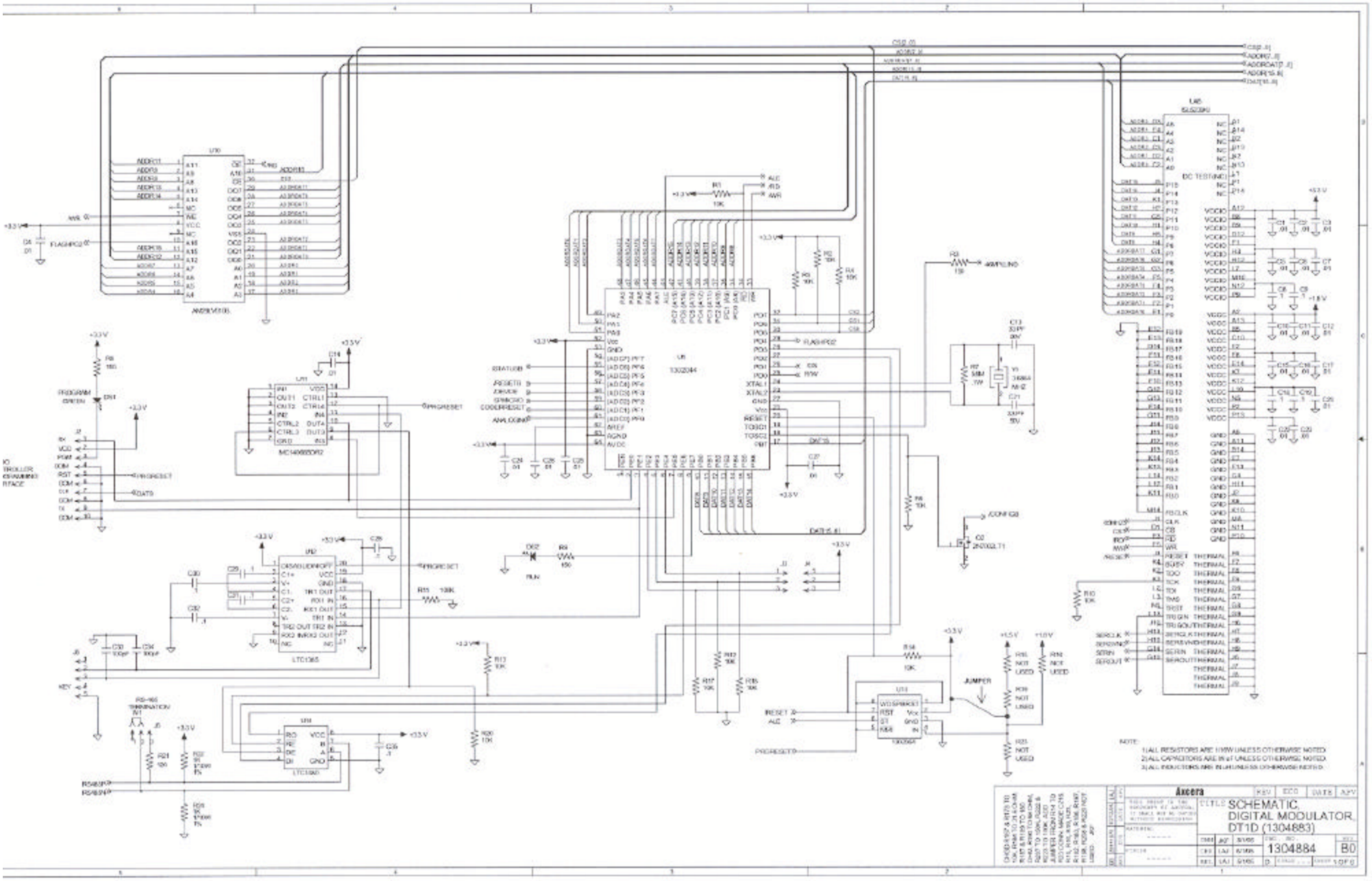
Axcera
SCHEMATIC,
DIGITAL MODULATOR,
DT1D (1304883)
1304884
B0
NOTE:
1) ALL RESISTORS ARE 1/16W UNLESS OTHERWISE NOTED.
2) ALL CAPACITORS ARE IN uF UNLESS OTHERWISE NOTED.
3) ALL INDUCTORS ARE IN uH UNLESS OTHERWISE NOTED.

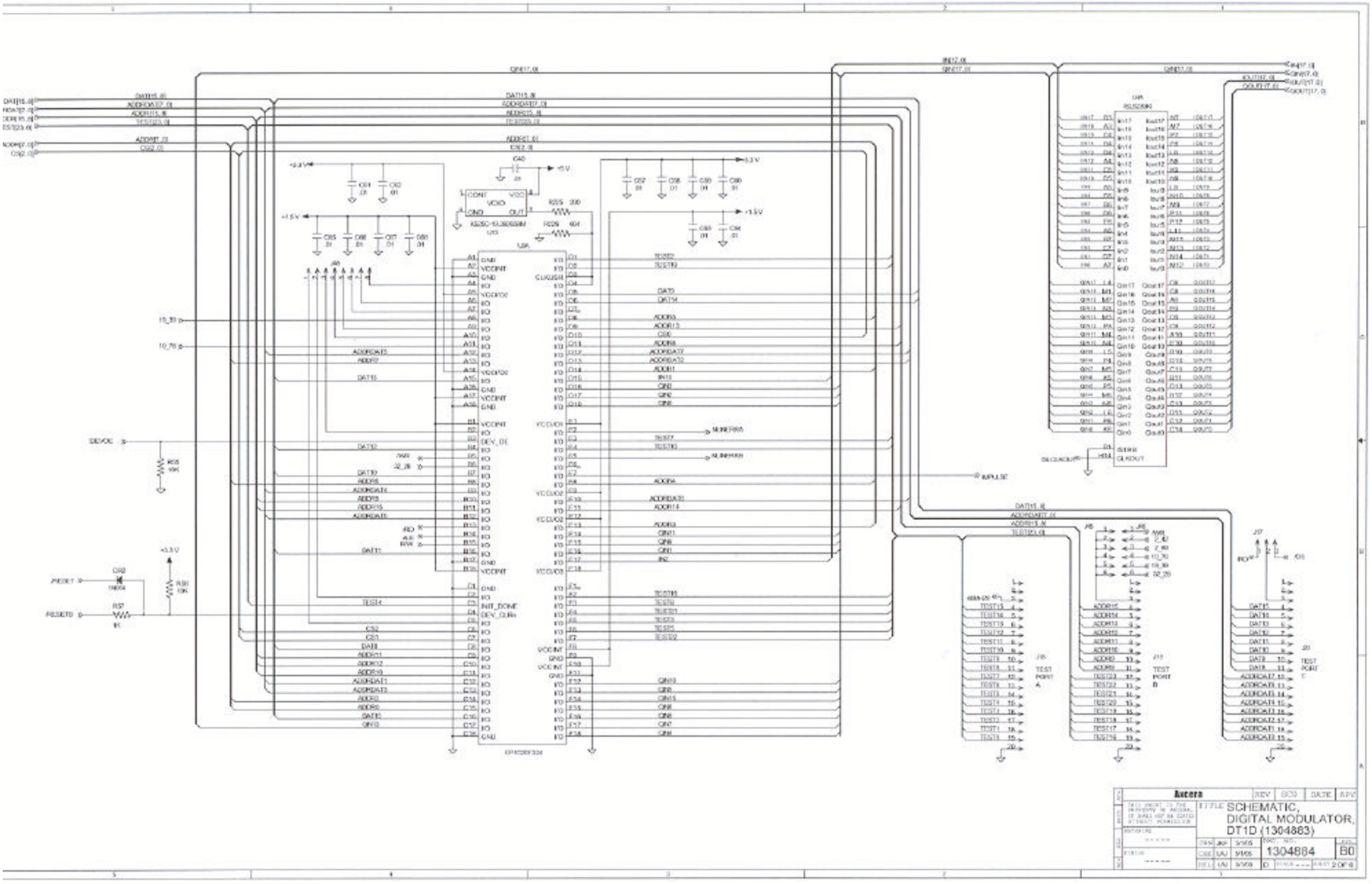
Aucera
SCHEMATIC,
DIGITAL MODULATOR,
DT1D (1304883)
1304884
B0
2 OF 8

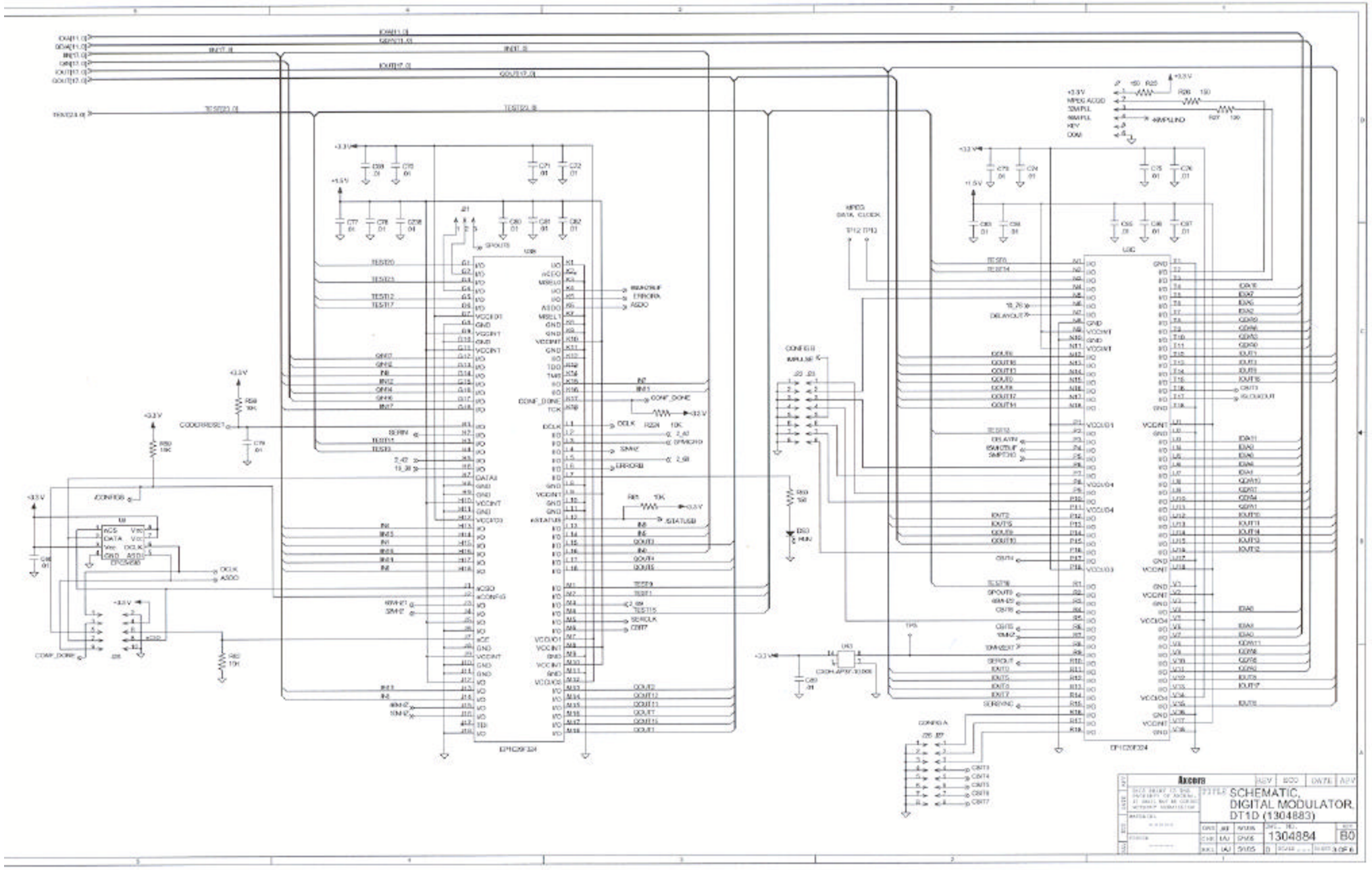
Axcera
SCHEMATIC,
DIGITAL MODULATOR,
DT1D (1304883)
1304884
B0
3 OF 6

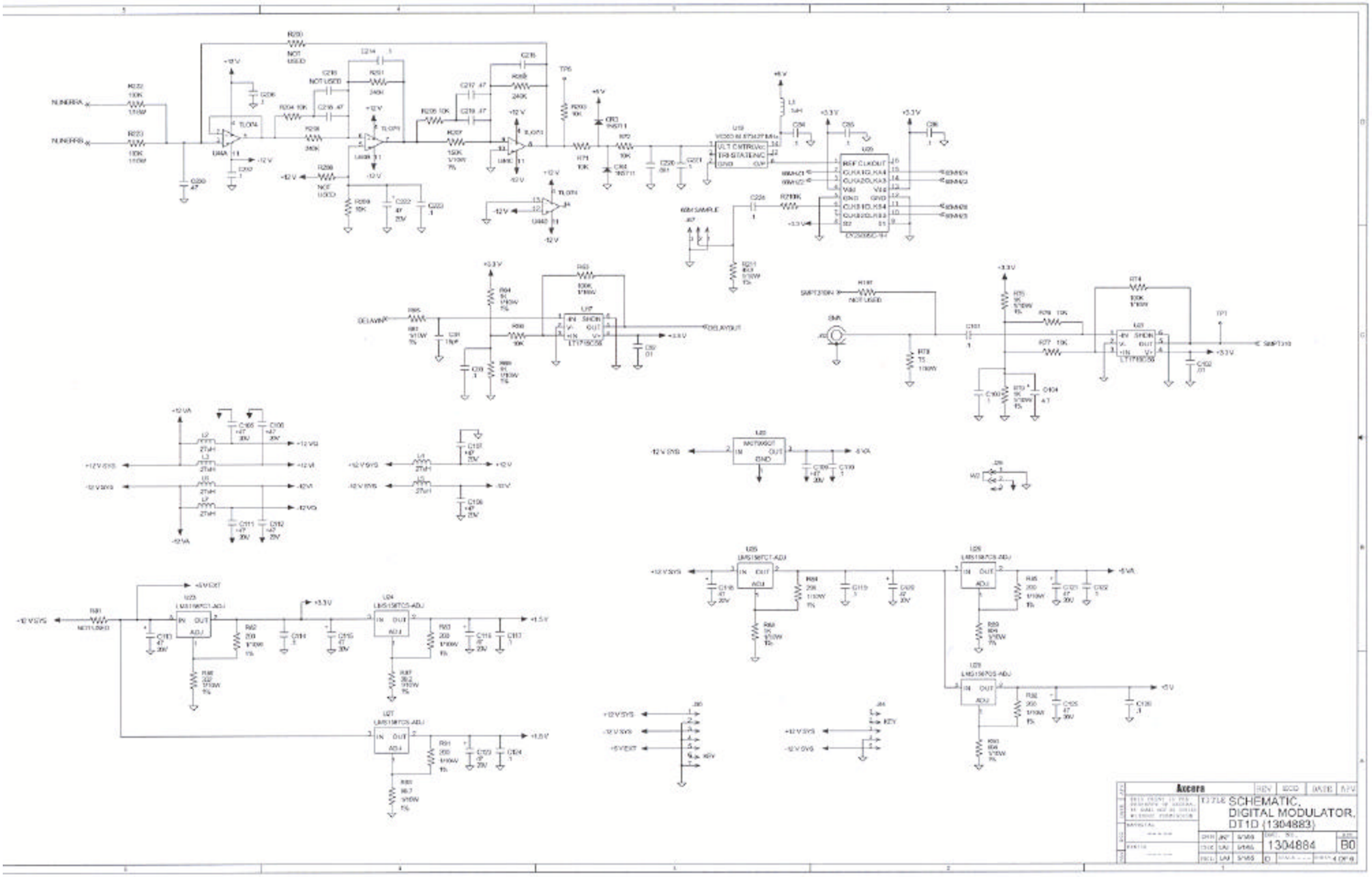
SCHEMATIC,
DIGITAL MODULATOR,
DT1D (1304883)
1304884
B0

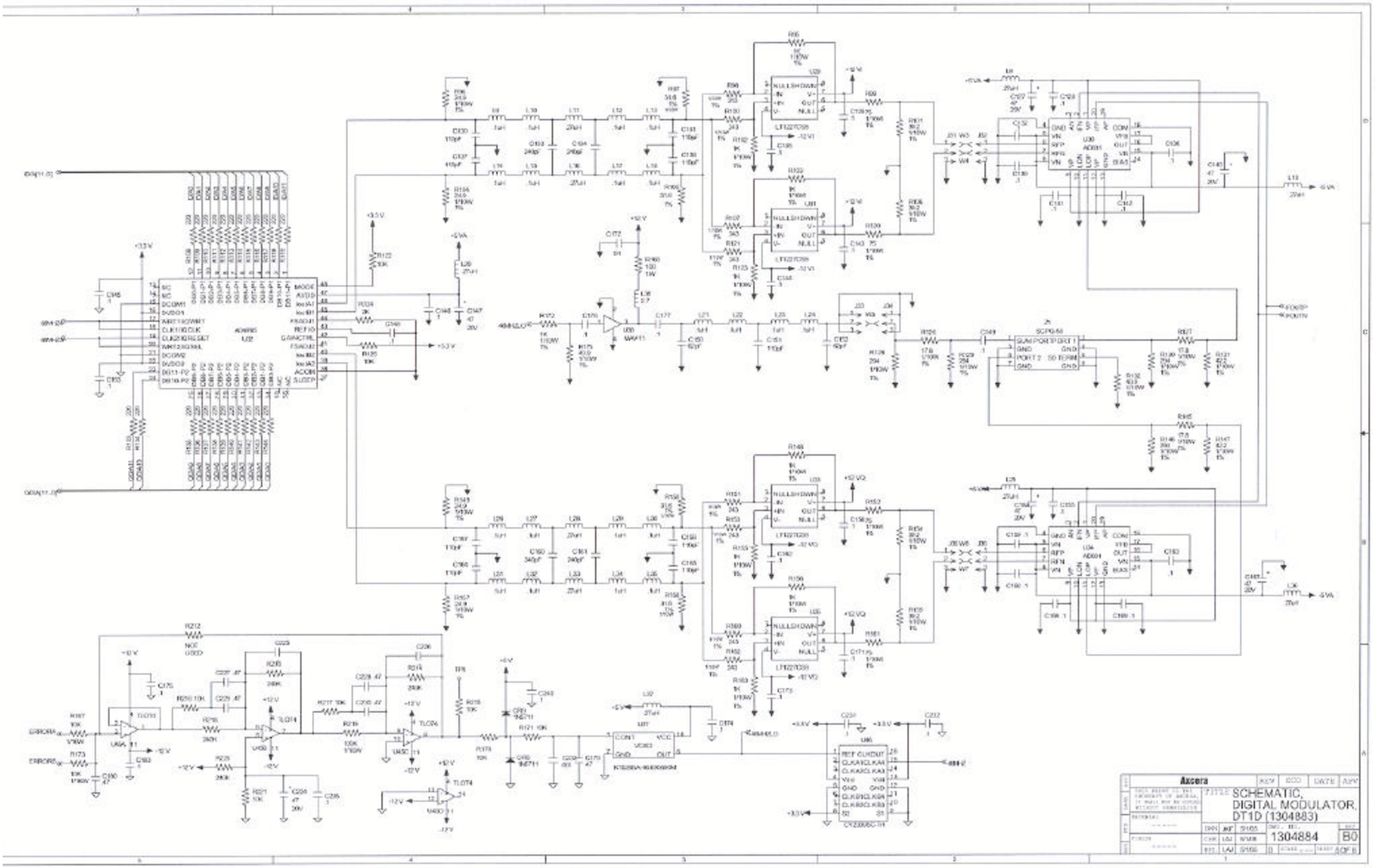
Axcera
SCHEMATIC,
DIGITAL MODULATOR,
DT1D (1304883)
1304884
B0

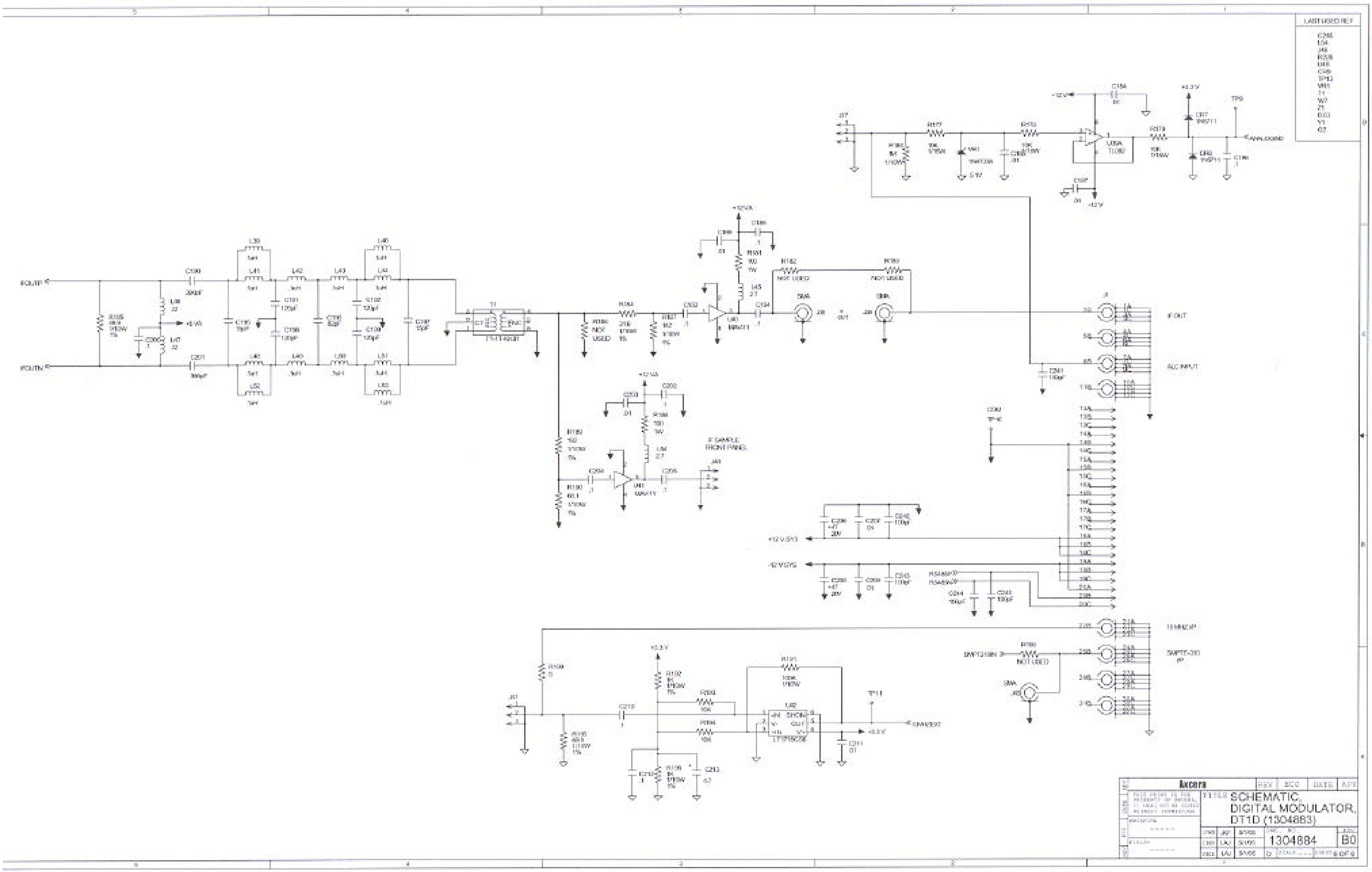
SCHEMATIC,
DIGITAL MODULATOR,
DT1D (1304883)
1304884
B0
6 OF 6
IF OUT
ALC INPUT
10 MHZ IP
IF SAMPLE
FRONT PANEL
LAST USED REF

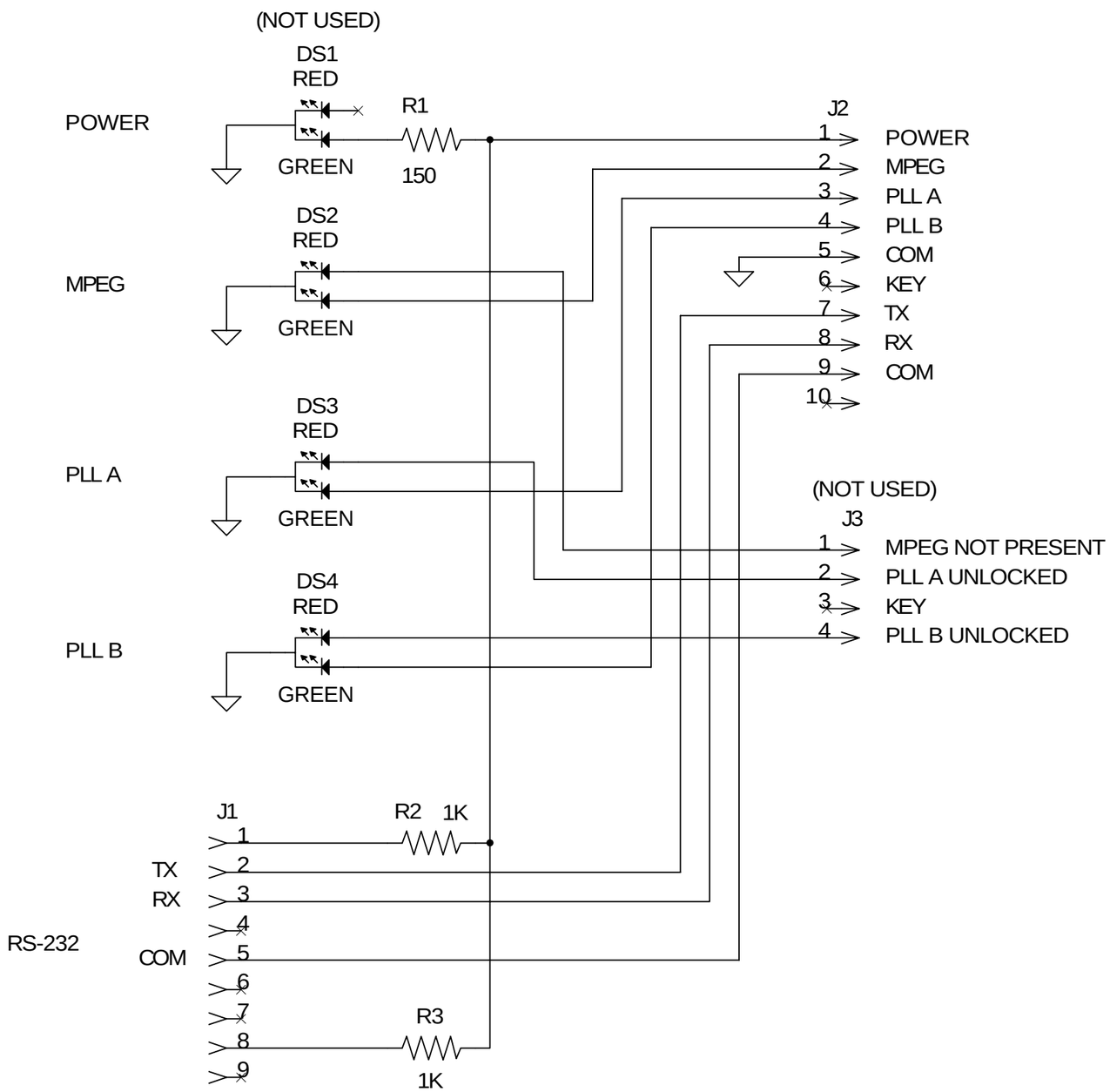

REV	ECO	DATE	APV
B0	20111868	11/15/05	LAJ

ADDED R1, R2 & R3. ADDED "NOT USED" TO DS1 & J3. (CR)

Axcera

THIS PRINT IS THE PROPERTY OF AXCERA, IT SHALL NOT BE COPIED WITHOUT PERMISSION

MATERIAL - - - - -

FINISH - - - - -

TITLE SCH., 8 VSB FRONT PANEL BD., LX (1305939)

DWN	JKF	4/8/05
CHK	LAJ	4/8/05
REL	LAJ	4/8/05

DWG. NO. 1305940 REV B0

B SCALE - - - SHEET 1 OF 1

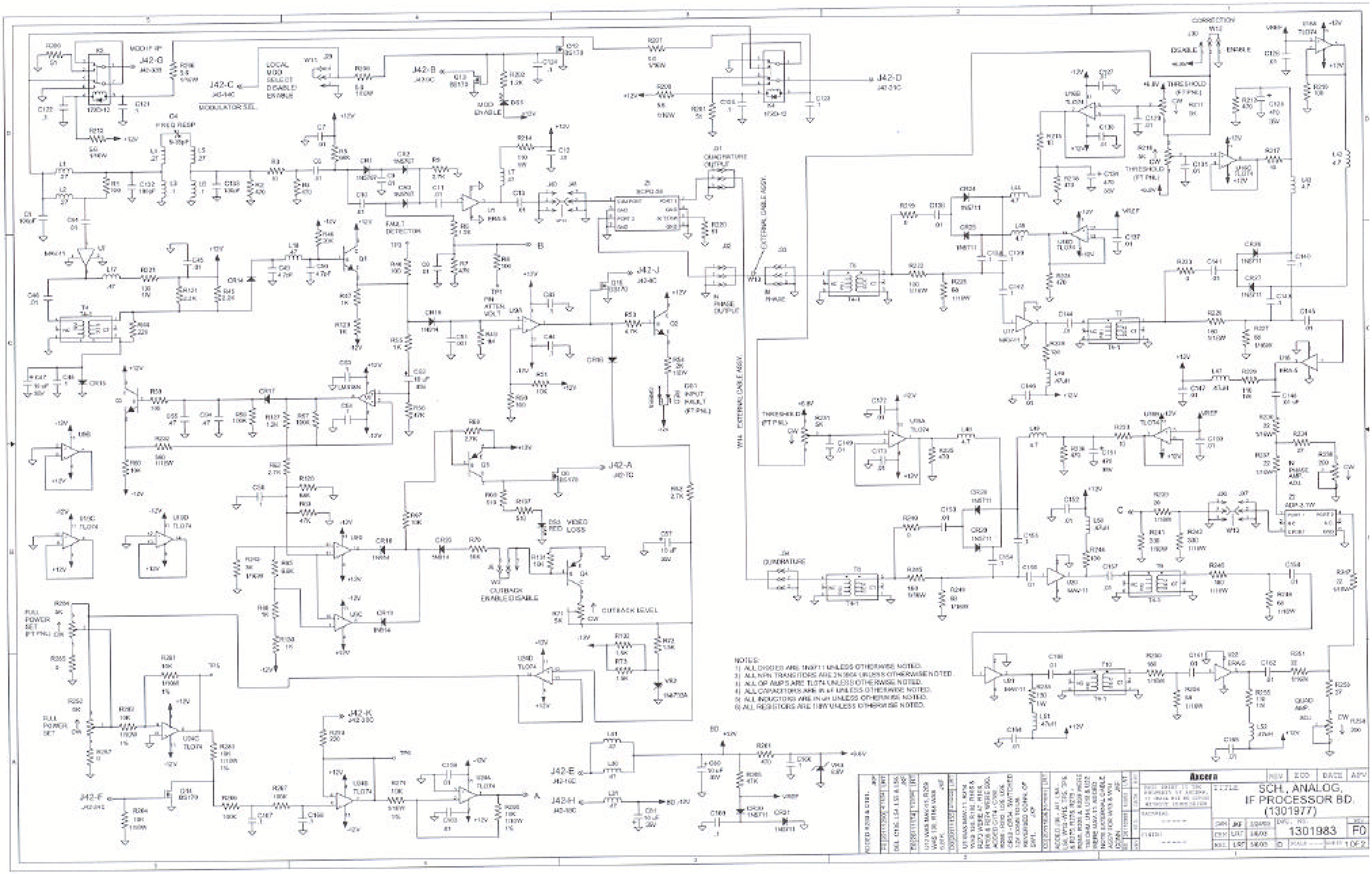
NOTES:
1) ALL DIODES ARE 1N5711 UNLESS OTHERWISE NOTED.
2) ALL NPN TRANSISTORS ARE 2N3904 UNLESS OTHERWISE NOTED.
3) ALL OP AMPS ARE TL074 UNLESS OTHERWISE NOTED.
4) ALL CAPACITORS ARE IN uF UNLESS OTHERWISE NOTED.
5) ALL INDUCTORS ARE IN uH UNLESS OTHERWISE NOTED.
6) ALL RESISTORS ARE 1/8W UNLESS OTHERWISE NOTED.
Axcera
REV
ECO
DATE
APV
TITLE
SCH., ANALOG,
IF PROCESSOR BD.
(1301977)
DWG. NO.
1301983
F0
1 OF 2
MODULATOR SEL.
QUADRATURE OUTPUT
IN PHASE OUTPUT
FAULT DETECTOR
PIN ATTEN. VOLT
VIDEO LOSS
CUTBACK ENABLE/DISABLE
CUTBACK LEVEL
INPUT FAULT (FT PNL)
FULL POWER SET (FT PNL)
FULL POWER SET
THRESHOLD (FT PNL)
CORRECTION
DISABLE
ENABLE
IN PHASE AMP. ADJ.
QUAD AMP. ADJ.
J42-G
J42-C
J42-B
J42-D
J42-J
J42-A
J42-K
J42-E
J42-F
J42-H

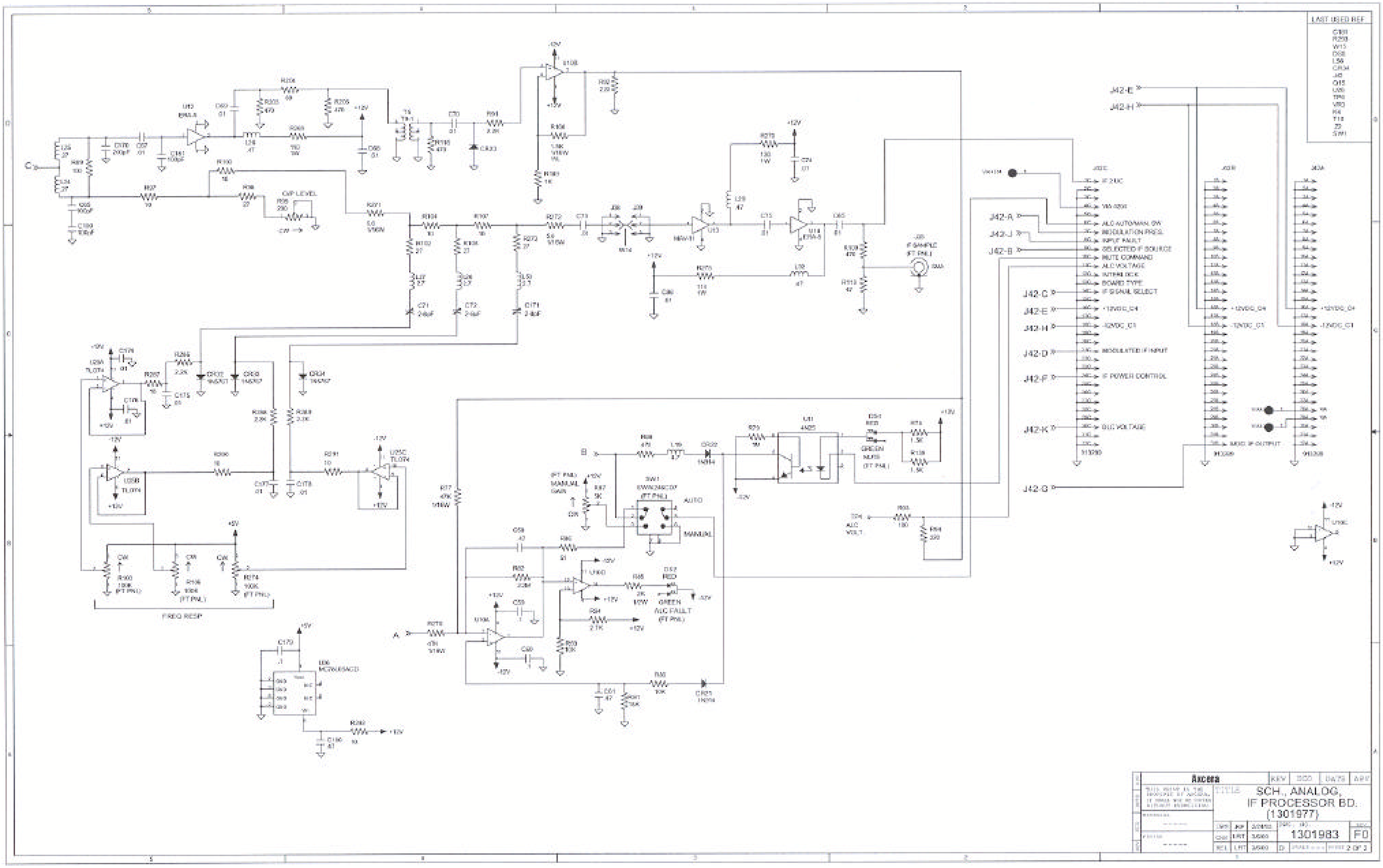
LAST USED REF
O/P LEVEL
IF SAMPLE (FT PNL)
FREQ RESP
(FT PNL) MANUAL GAIN
AUTO
MANUAL
GREEN ALC FAULT (FT PNL)
J42-E
J42-H
J42-A
J42-J
J42-B
J42-C
J42-D
J42-F
J42-K
J42-G
ALC AUTO/MAN. SW
MODULATION PRES.
INPUT FAULT
SELECTED IF SOURCE
MUTE COMMAND
ALC VOLTAGE
INTERLOCK
BOARD TYPE
IF SIGNAL SELECT
+12VDC_C4
-12VDC_C1
MODULATED IF INPUT
IF POWER CONTROL
DLC VOLTAGE
MOD. IF OUTPUT
Axcera
SCH., ANALOG, IF PROCESSOR BD. (1301977)
1301983
F0
2 OF 3

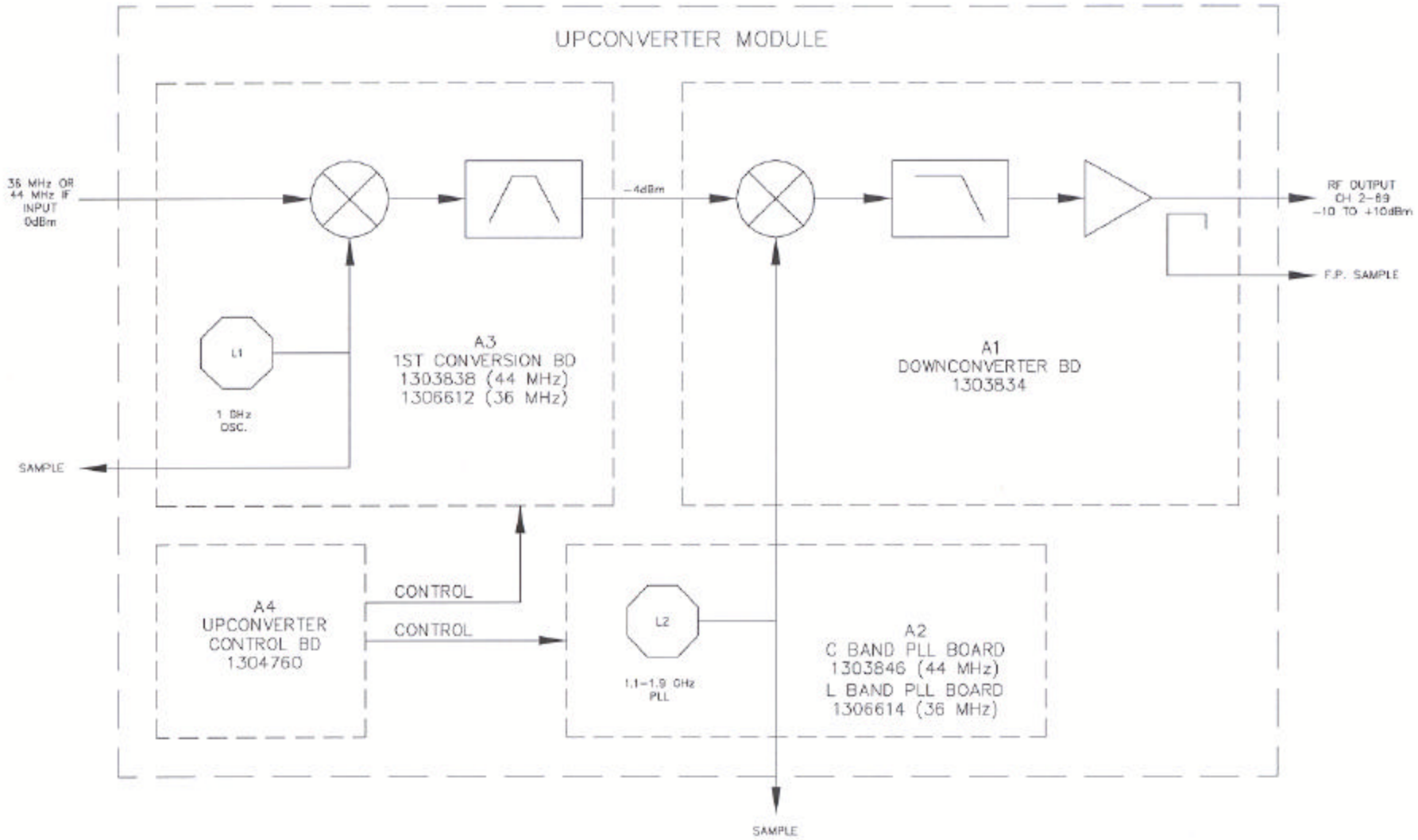

REV	ECO	DATE	APV

Axcera.

THIS PRINT IS THE PROPERTY OF AXCERA, IT SHALL NOT BE COPIED WITHOUT PERMISSION.

MATERIAL ------

FINISH ------

TITLE B/D, U/C ASSEMBLY, VHF/UHF LX

DWN	RGE	5/7/04	DWG. NO. 1303830	REV A0
CHK	DWB	9/30/04		
REL	DWB	9/30/04	C SCALE ---	SHEET 1 OF 1

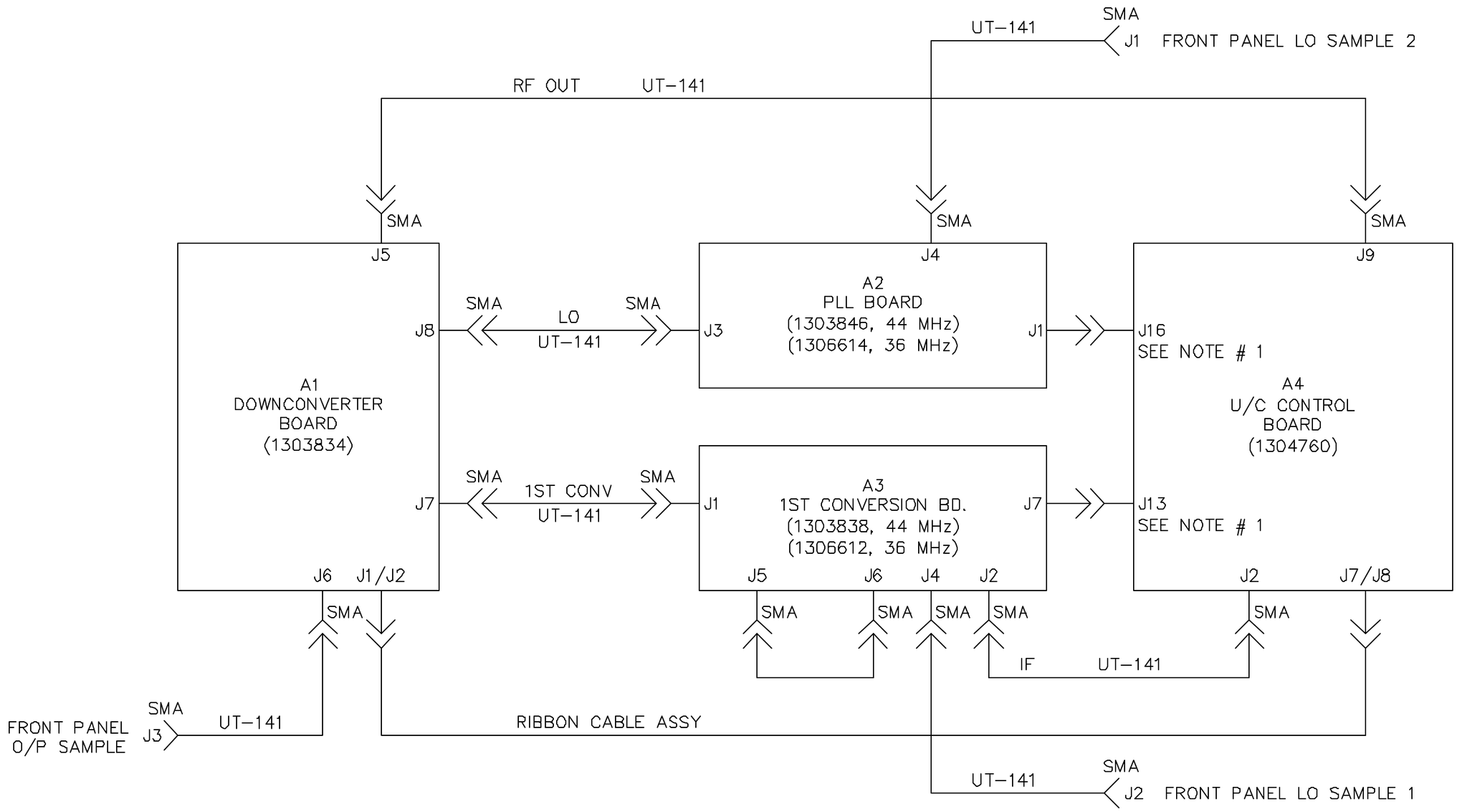

NOTES:
1. CONNECTORS ARE BOARD TO BOARD AND NOT PART OF THE HARNESS.

A2-J3 WAS A2-J2 (TYPO)			RT
B0	20111728	4/1/05	DB
REV	ECO	DATE	APV

Axcera®

THIS PRINT IS THE PROPERTY OF AXCERA, IT SHALL NOT BE COPIED WITHOUT PERMISSION.

MATERIAL ------

FINISH ------

TITLE I/C, UPCONVERTER ASSY, VHF/UHF, LX

DWN	RGE	04/06/04	DWG. NO. 1303831	REV B0
CHK	DWB	9/30/04		
REL	DWB	9/30/04	B SCALE ---	SHEET 1 OF 1

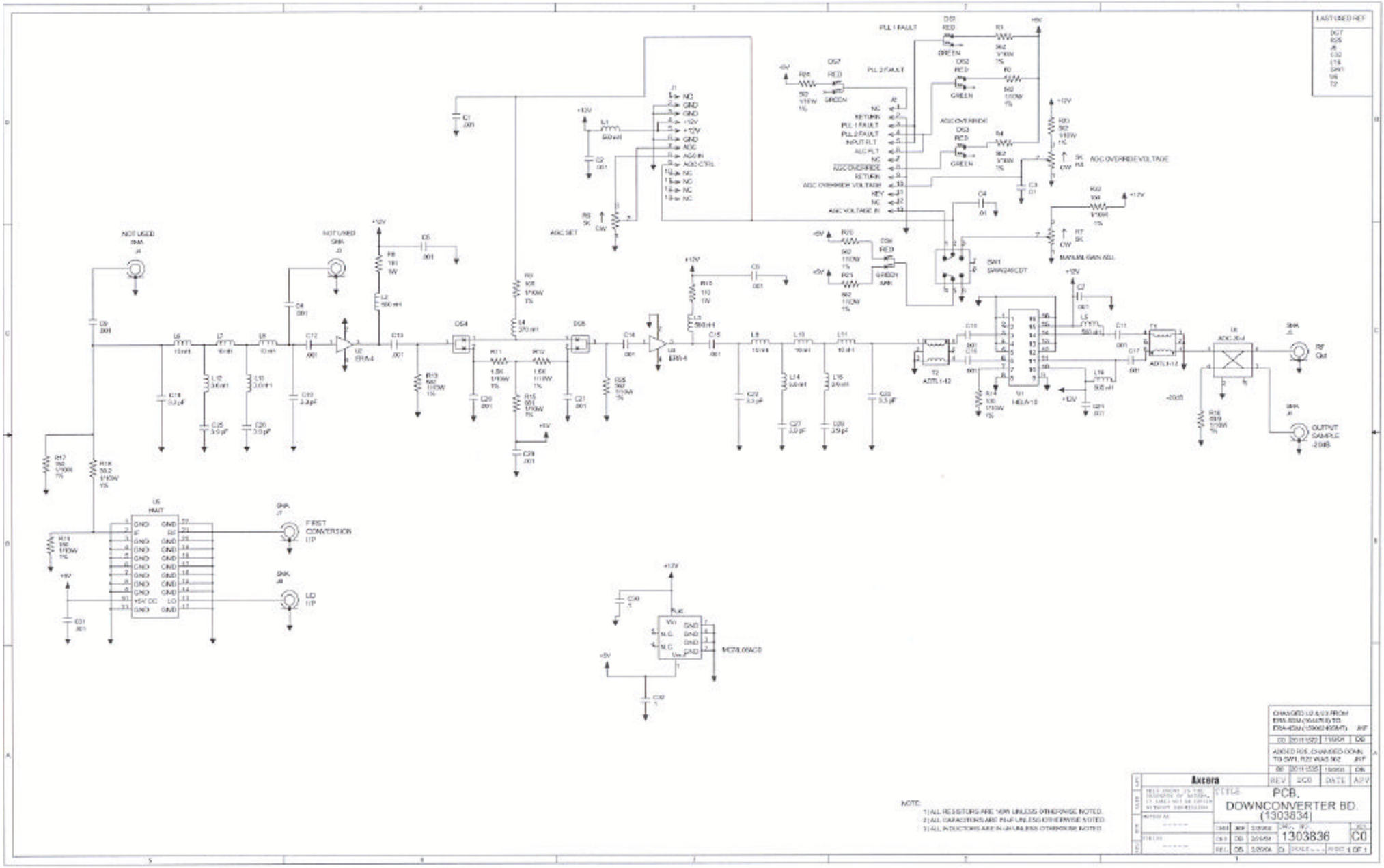

NOTE:
1) ALL RESISTORS ARE 1/8W UNLESS OTHERWISE NOTED.
2) ALL CAPACITORS ARE IN uF UNLESS OTHERWISE NOTED.
3) ALL INDUCTORS ARE IN uH UNLESS OTHERWISE NOTED.

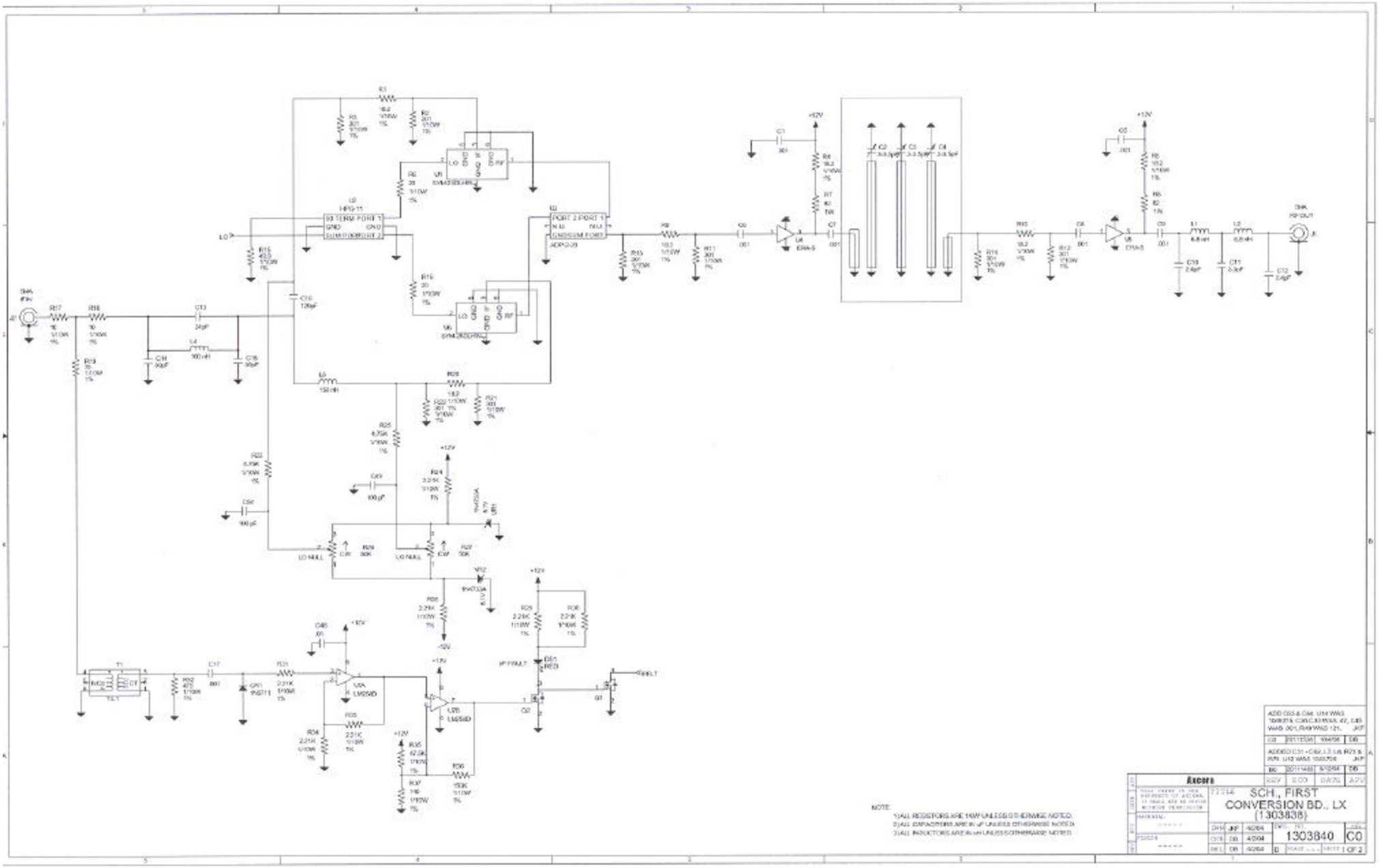
SCH., FIRST
CONVERSION BD., LX
(1303838)
1303840
C0
1 OF 2
NOTE:
1)ALL RESISTORS ARE 1/8W UNLESS OTHERWISE NOTED.
2)ALL CAPACITORS ARE IN uF UNLESS OTHERWISE NOTED.
3)ALL INDUCTORS ARE IN uH UNLESS OTHERWISE NOTED.

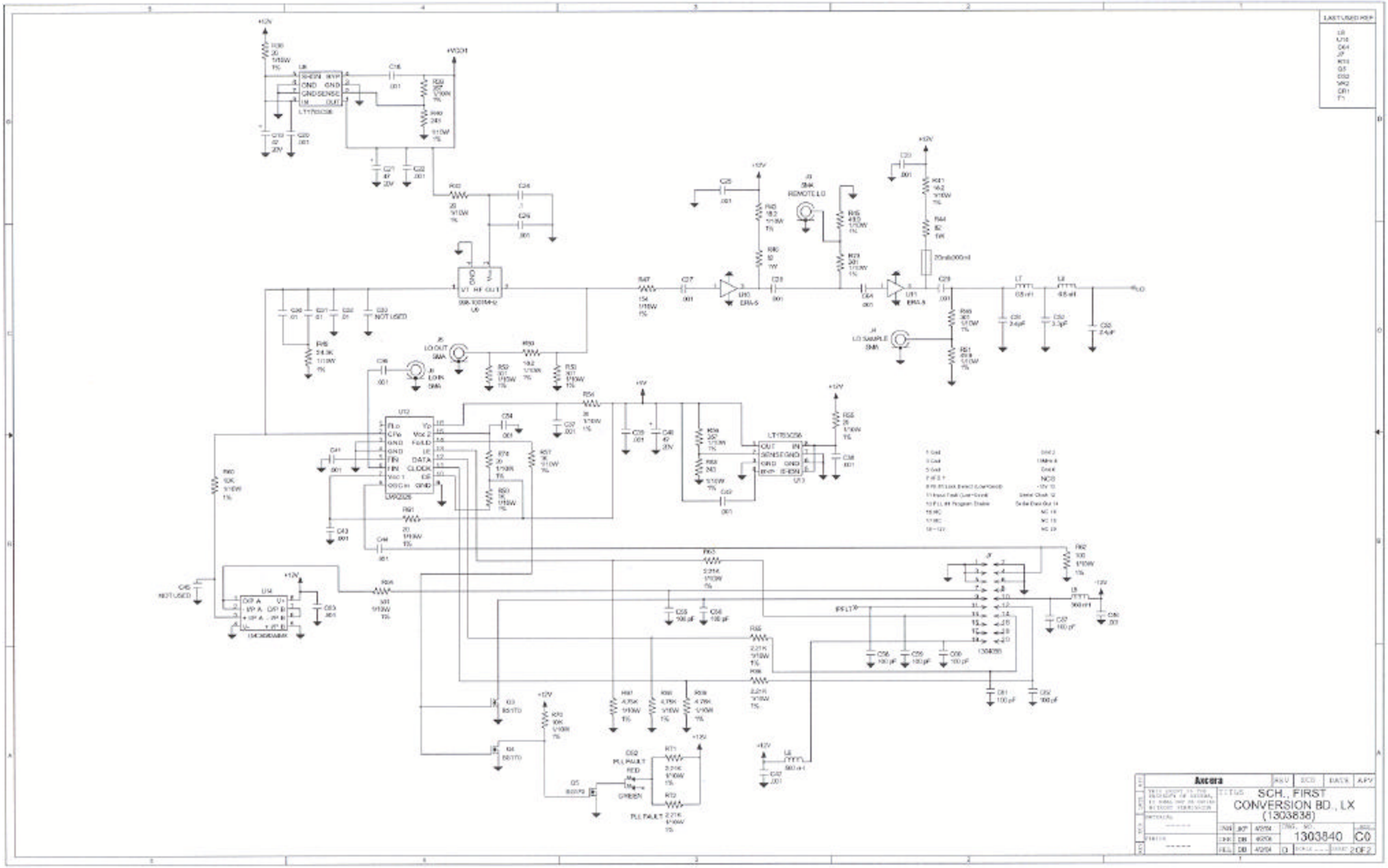
Axcera
SCH., FIRST CONVERSION BD., LX
(1303838)
1303840
C0
2 OF 2
REMOTE LO
LO OUT SMA
LO IN SMA
LO SAMPLE SMA
PLL FAULT RED
PLL FAULT GREEN
NOT USED
LAST USED REF

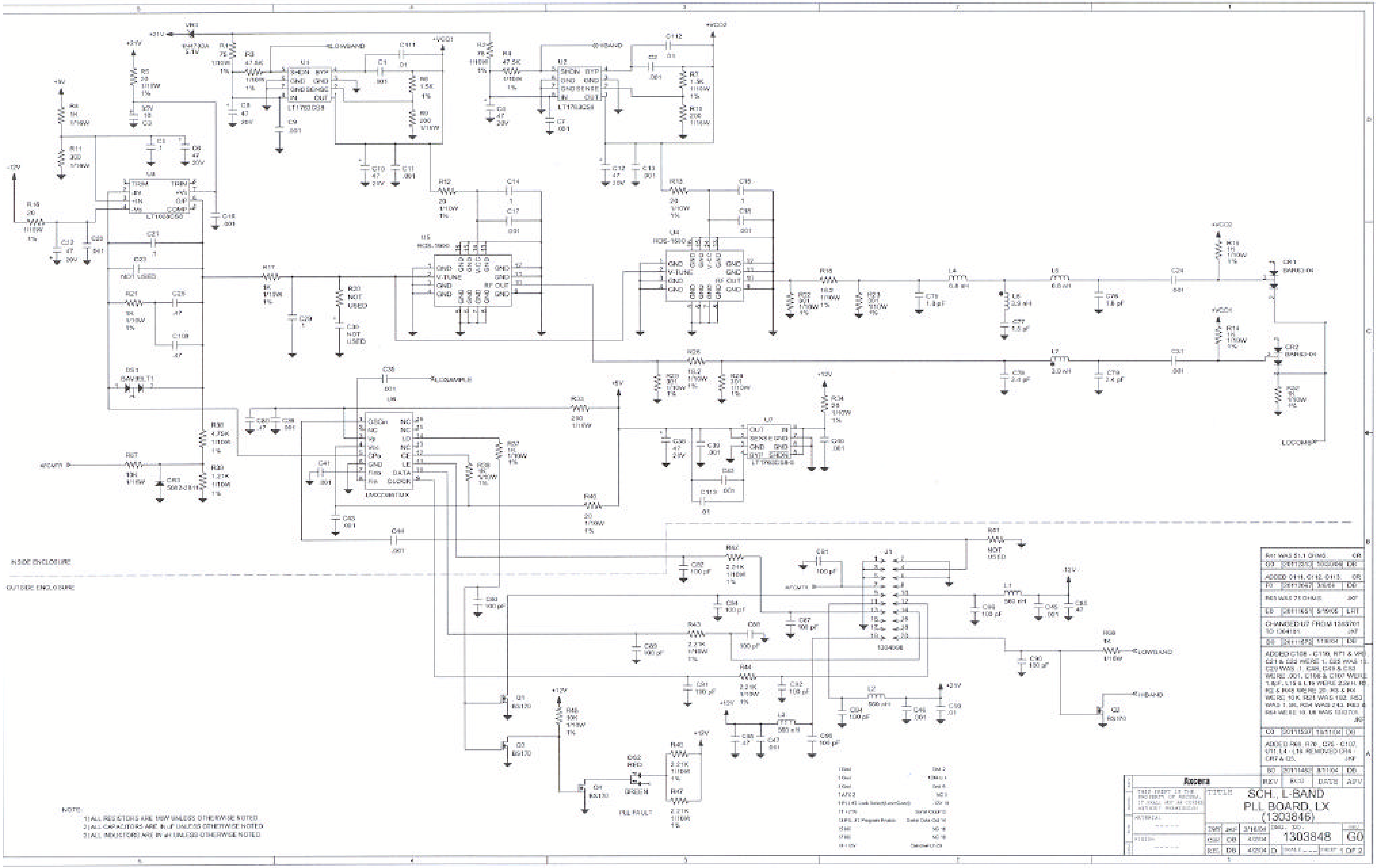

INSIDE ENCLOSURE
OUTSIDE ENCLOSURE
NOTE:
1) ALL RESISTORS ARE 1/8W UNLESS OTHERWISE NOTED
2) ALL CAPACITORS ARE IN uF UNLESS OTHERWISE NOTED
3) ALL INDUCTORS ARE IN uH UNLESS OTHERWISE NOTED
Axcera
TITLE
SCH., L-BAND
PLL BOARD, LX
(1303846)
1303848
G0
1 OF 2

LAST USED REF
C113
L16
U11
R71
J4
Q4
CR3
DS2
VR1

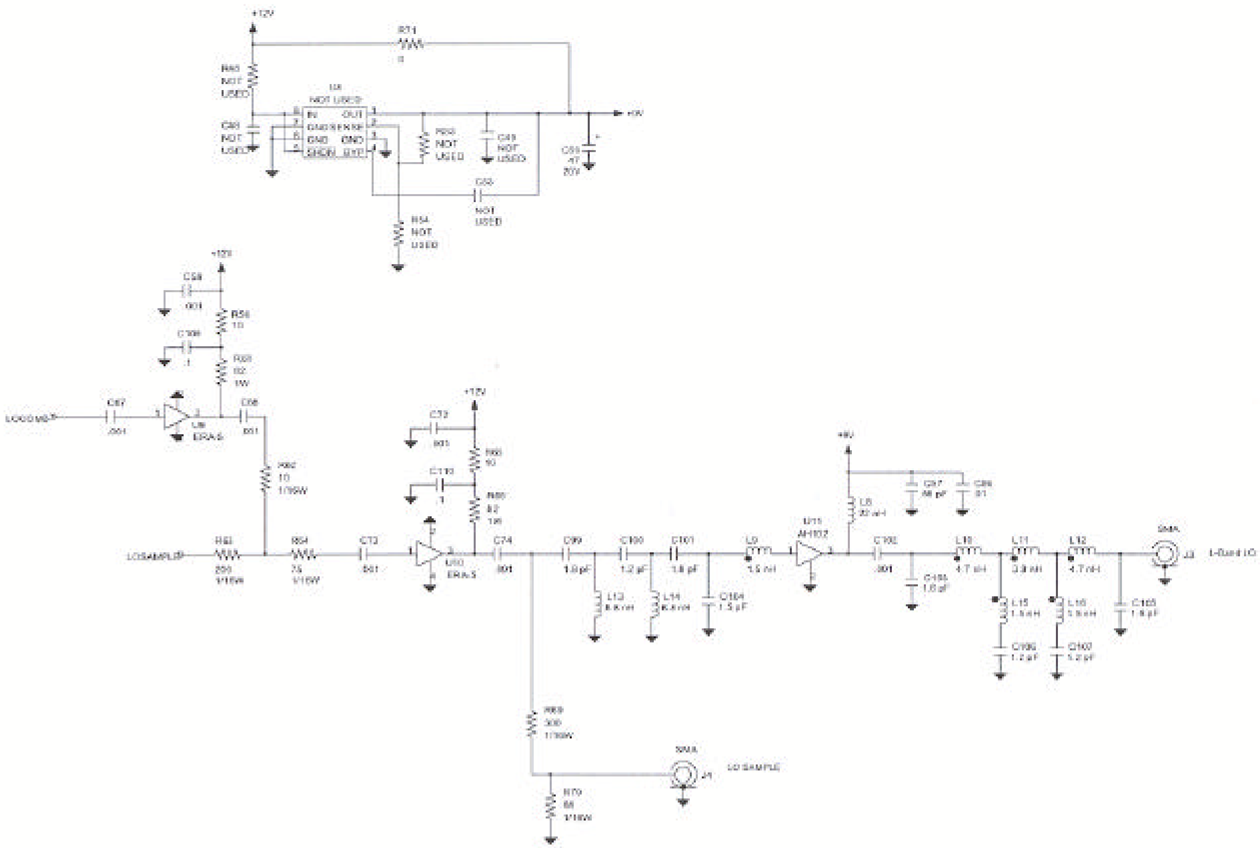

Axcera	REV	ECO	DATE	APV

TITLE SCH., L-BAND PLL BOARD, LX (1303846)

DWN	JAF	2/16/04	DWG. NO. 1303848	REV G0
CHK	DB	4/2/04		
ENG.	DM	4/2/04	D	SHEET 2 OF 2

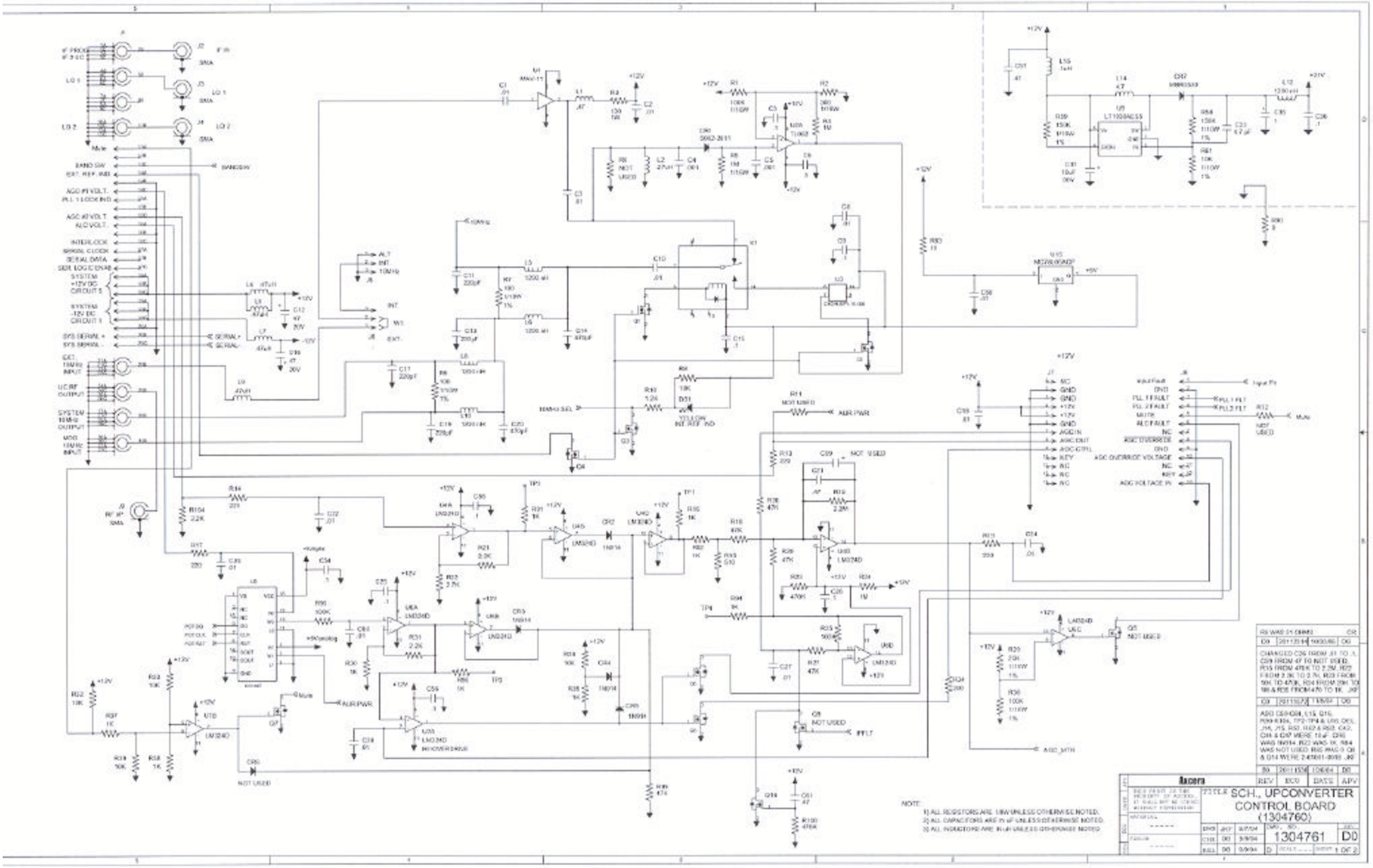
Kacera
TITLE SCH., UPCONVERTER CONTROL BOARD (1304760)
1304761
D0
1 OF 2
NOTE:
1) ALL RESISTORS ARE 1/8W UNLESS OTHERWISE NOTED.
2) ALL CAPACITORS ARE in uF UNLESS OTHERWISE NOTED.
3) ALL INDUCTORS ARE IN uH UNLESS OTHERWISE NOTED.

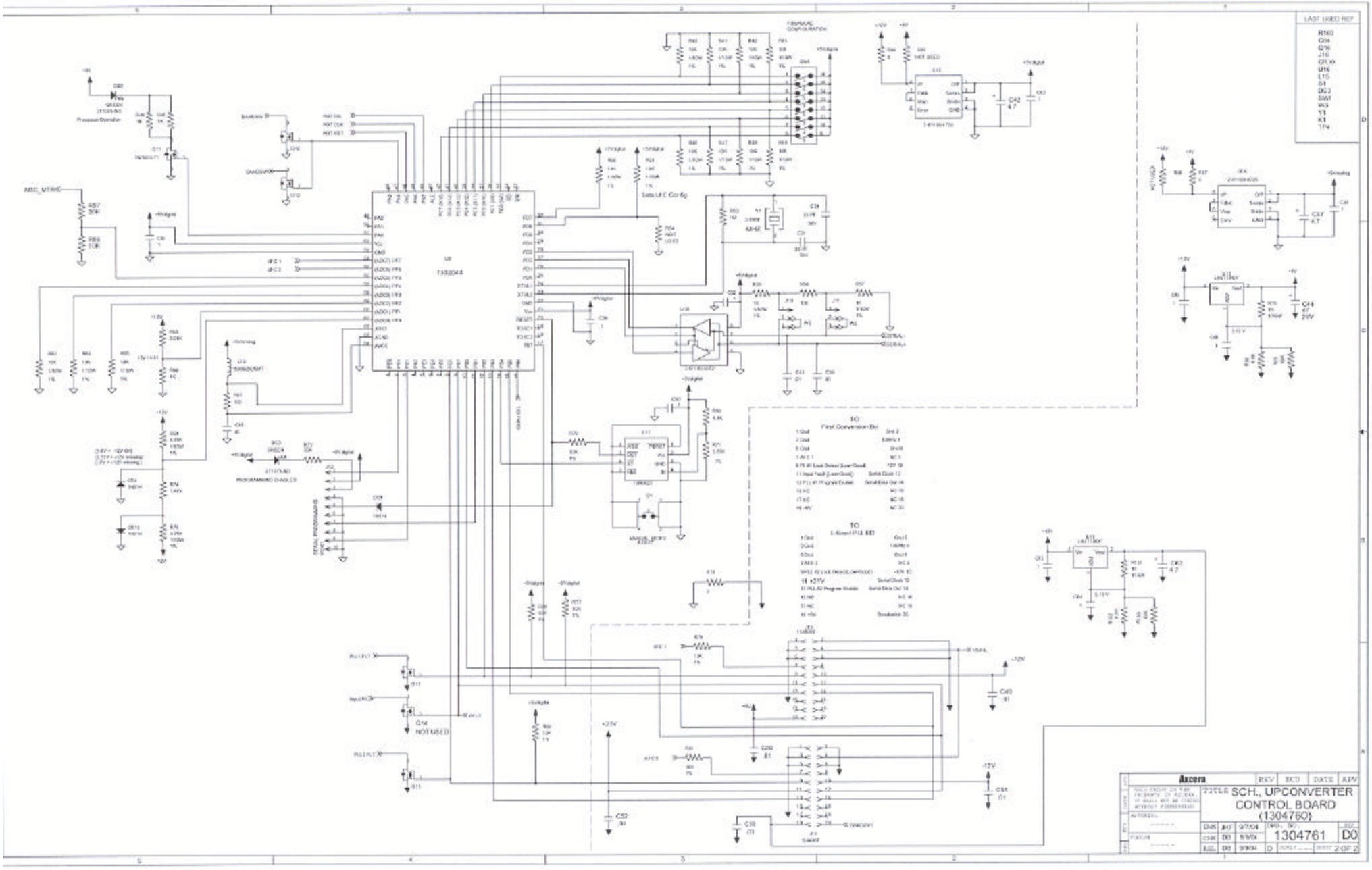
Axcera
SCH., UPCONVERTER CONTROL BOARD (1304760)
1304761
D0
2 OF 2

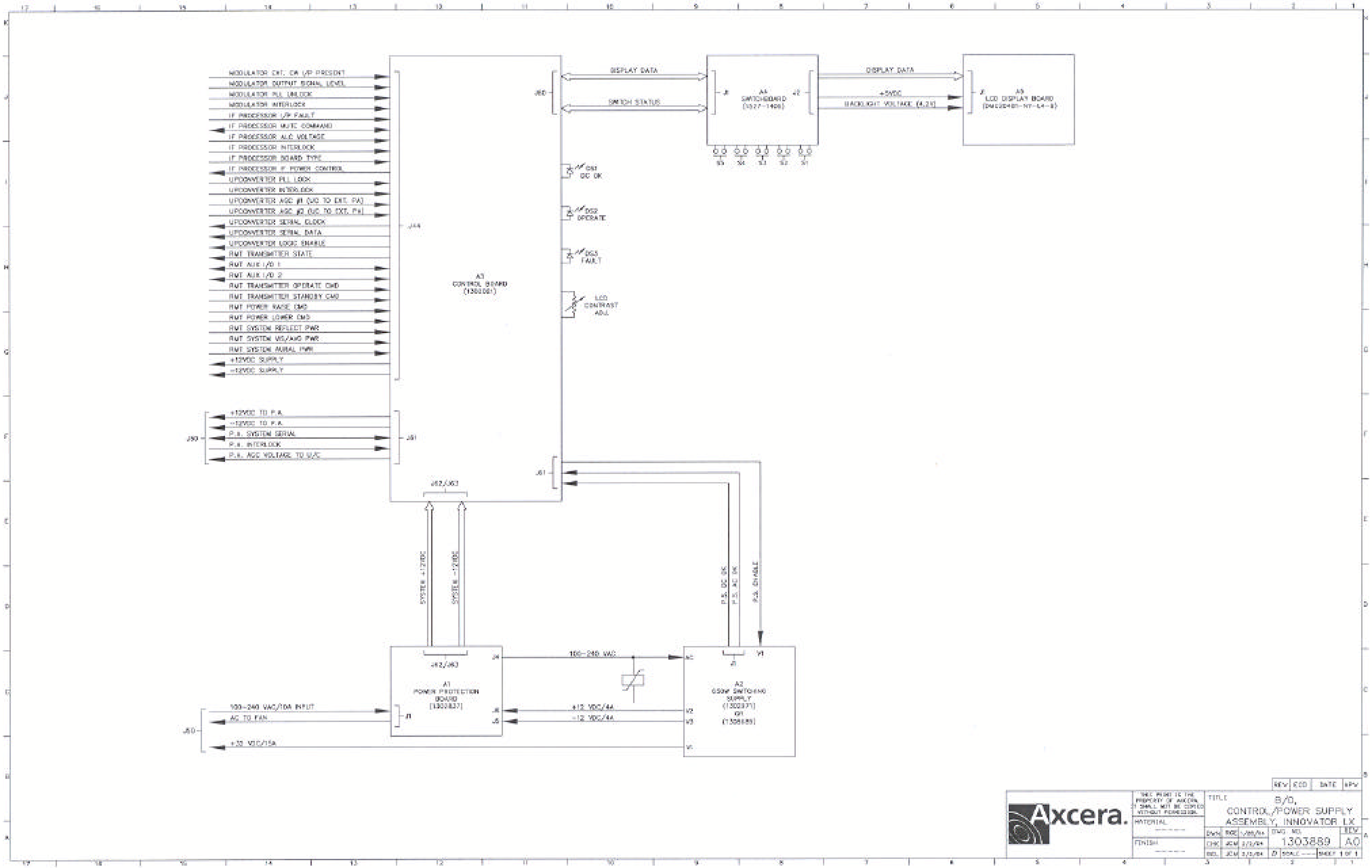
MODULATOR EXT. CW I/P PRESENT
MODULATOR OUTPUT SIGNAL LEVEL
MODULATOR PLL UNLOCK
MODULATOR INTERLOCK
IF PROCESSOR I/P FAULT
IF PROCESSOR MUTE COMMAND
IF PROCESSOR ALC VOLTAGE
IF PROCESSOR INTERLOCK
IF PROCESSOR BOARD TYPE
IF PROCESSOR IF POWER CONTROL
UPCONVERTER PLL LOCK
UPCONVERTER INTERLOCK
UPCONVERTER AGC #1 (U/C TO EXT. PA)
UPCONVERTER AGC #2 (U/C TO EXT. PA)
UPCONVERTER SERIAL CLOCK
UPCONVERTER SERIAL DATA
UPCONVERTER LOGIC ENABLE
RMT TRANSMITTER STATE
RMT AUX I/O 1
RMT AUX I/O 2
RMT TRANSMITTER OPERATE CMD
RMT TRANSMITTER STANDBY CMD
RMT POWER RAISE CMD
RMT POWER LOWER CMD
RMT SYSTEM REFLECT PWR
RMT SYSTEM VIS/AVG PWR
RMT SYSTEM AURAL PWR
+12VDC SUPPLY
-12VDC SUPPLY
J44
+12VDC TO P.A.
-12VDC TO P.A.
P.A. SYSTEM SERIAL
P.A. INTERLOCK
P.A. AGC VOLTAGE TO U/C
J50
J51
A3
CONTROL BOARD
J60
J61
J62/J63
DS1
DC OK
DS2
OPERATE
DS3
FAULT
LCD
CONTRAST
ADJ.
DISPLAY DATA
SWITCH STATUS
J1
A4
SWITCHBOARD
J2
S5 S4 S3 S2 S1
+5VDC
BACKLIGHT VOLTAGE (4.2V)
A5
LCD DISPLAY BOARD
SYSTEM +12VDC
SYSTEM -12VDC
P.S. DC OK
P.S. AC OK
P.S. ENABLE
J62/J63
A1
POWER PROTECTION
BOARD
J4
100-240 VAC
AC
A2
650W SWITCHING
SUPPLY
V1
V2
V3
+12 VDC/4A
-12 VDC/4A
100-240 VAC/10A INPUT
AC TO FAN
+32 VDC/15A
J50
REV ECO DATE APV
Axcera.
THIS PRINT IS THE PROPERTY OF AXCERA. IT SHALL NOT BE COPIED WITHOUT PERMISSION.
MATERIAL
FINISH
TITLE
B/D,
CONTROL/POWER SUPPLY
ASSEMBLY, INNOVATOR LX
DWG NO.
1303889
REV
A0
SHEET 1 OF 1