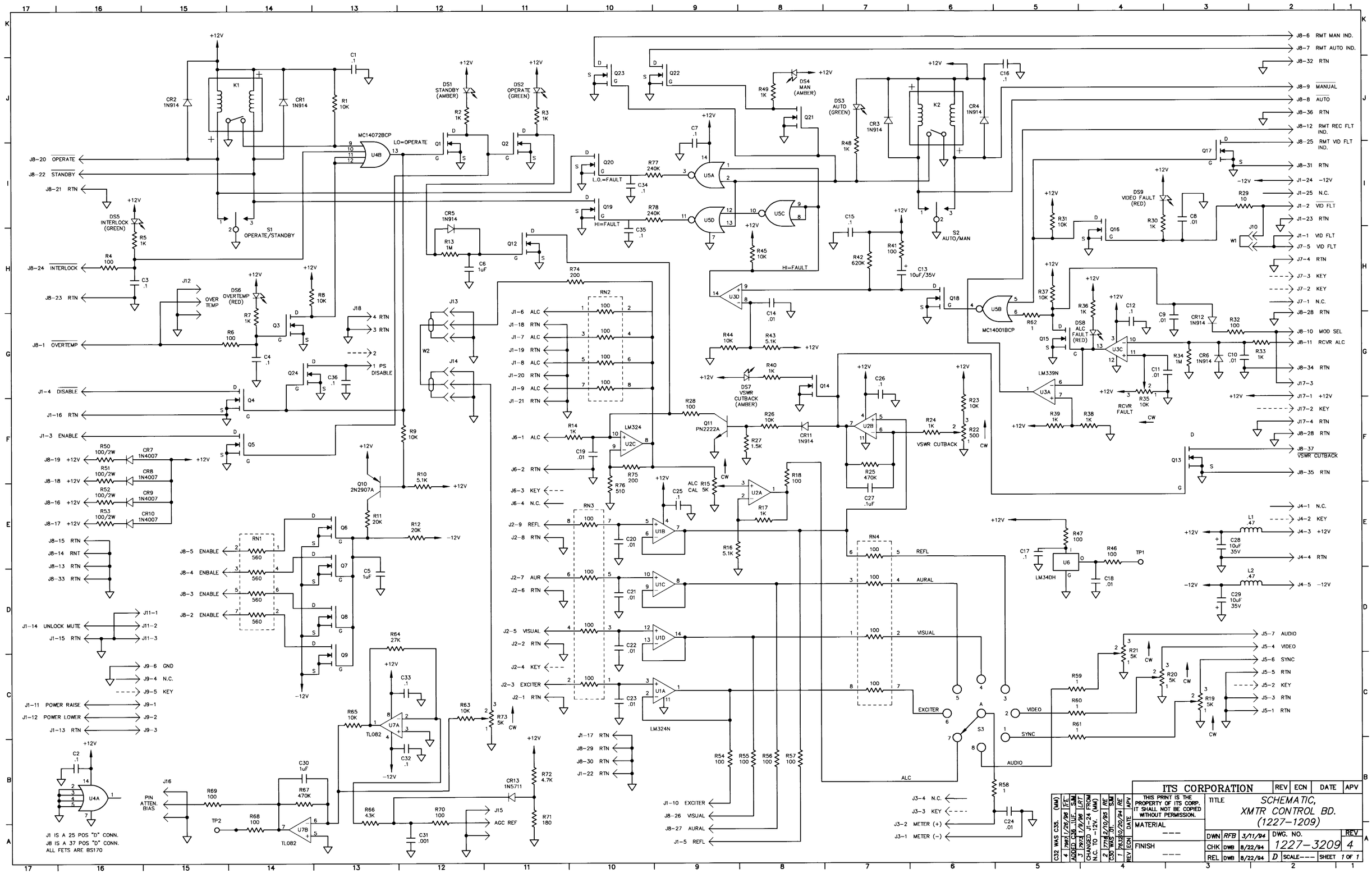
J8-20 OPERATE
J8-22 STANDBY
J8-21 RTN
J8-24 INTERLOCK
J8-23 RTN
J8-1 OVERTEMP
J1-4 DISABLE
J1-16 RTN
J1-3 ENABLE
J8-19 +12V
J8-18 +12V
J8-16 +12V
J8-17 +12V
J8-15 RTN
J8-14 RNT
J8-13 RTN
J8-33 RTN
J8-5 ENABLE
J8-4 ENBALE
J8-3 ENABLE
J8-2 ENABLE
J1-14 UNLOCK MUTE
J1-15 RTN
J9-6 GND
J9-4 N.C.
J9-5 KEY
J1-11 POWER RAISE
J1-12 POWER LOWER
J1-13 RTN
J1 IS A 25 POS "D" CONN.
J8 IS A 37 POS "D" CONN.
ALL FETS ARE BS170
J8-6 RMT MAN IND.
J8-7 RMT AUTO IND.
J8-32 RTN
J8-9 MANUAL
J8-8 AUTO
J8-36 RTN
J8-12 RMT REC FLT IND.
J8-25 RMT VID FLT IND.
J8-31 RTN
J1-24 -12V
J1-25 N.C.
J1-2 VID FLT
J1-23 RTN
J1-1 VID FLT
J7-5 VID FLT
J7-4 RTN
J7-3 KEY
J7-2 KEY
J7-1 N.C.
J8-28 RTN
J8-10 MOD SEL
J8-11 RCVR ALC
J8-34 RTN
J17-3
J17-1 +12V
J17-2 KEY
J17-4 RTN
J8-28 RTN
J8-37 VSWR CUTBACK
J8-35 RTN
J4-1 N.C.
J4-2 KEY
J4-3 +12V
J4-4 RTN
J4-5 -12V
J5-7 AUDIO
J5-4 VIDEO
J5-6 SYNC
J5-5 RTN
J5-2 KEY
J5-3 RTN
J5-1 RTN
J1-6 ALC
J1-18 RTN
J1-7 ALC
J1-19 RTN
J1-8 ALC
J1-20 RTN
J1-9 ALC
J1-21 RTN
J1-1 ALC
J6-2 RTN
J6-3 KEY
J6-4 N.C.
J2-9 REFL
J2-8 RTN
J2-7 AUR
J2-6 RTN
J2-5 VISUAL
J2-2 RTN
J2-4 KEY
J2-3 EXCITER
J2-1 RTN
J1-17 RTN
J8-29 RTN
J8-30 RTN
J1-22 RTN
J1-10 EXCITER
J8-26 VISUAL
J8-27 AURAL
J1-5 REFL
J3-4 N.C.
J3-3 KEY
J3-2 METER (+)
J3-1 METER (-)
PIN ATTEN. BIAS
AGC REF
LO=OPERATE
L.O.=FAULT
HI=FAULT
VSWR CUTBACK
RCVR FAULT
ALC CAL
VIDEO
SYNC
AUDIO
ALC
REFL
AURAL
VISUAL
EXCITER
ITS CORPORATION
THIS PRINT IS THE PROPERTY OF ITS CORP. IT SHALL NOT BE COPIED WITHOUT PERMISSION.
TITLE
SCHEMATIC, XMTR CONTROL BD. (1227-1209)
MATERIAL ---
FINISH ---
DWN RFB 3/11/94
CHK DWB 8/22/94
REL DWB 8/22/94
DWG. NO. 1227-3209
REV 4
D SCALE--- SHEET 1 OF 1
REV ECN DATE APV
4 7903 1/26/96 TFC S.M. C32 WAS C35. (MM)
3 7974 1/9/96 LRT ADDED C36 .1UF
2 7774 8/10/95 RE S.M. CHANGED J1-24 FROM N.C. TO -12V. (MM)
1 7633 10/20/94 RE APV C30 WAS .01