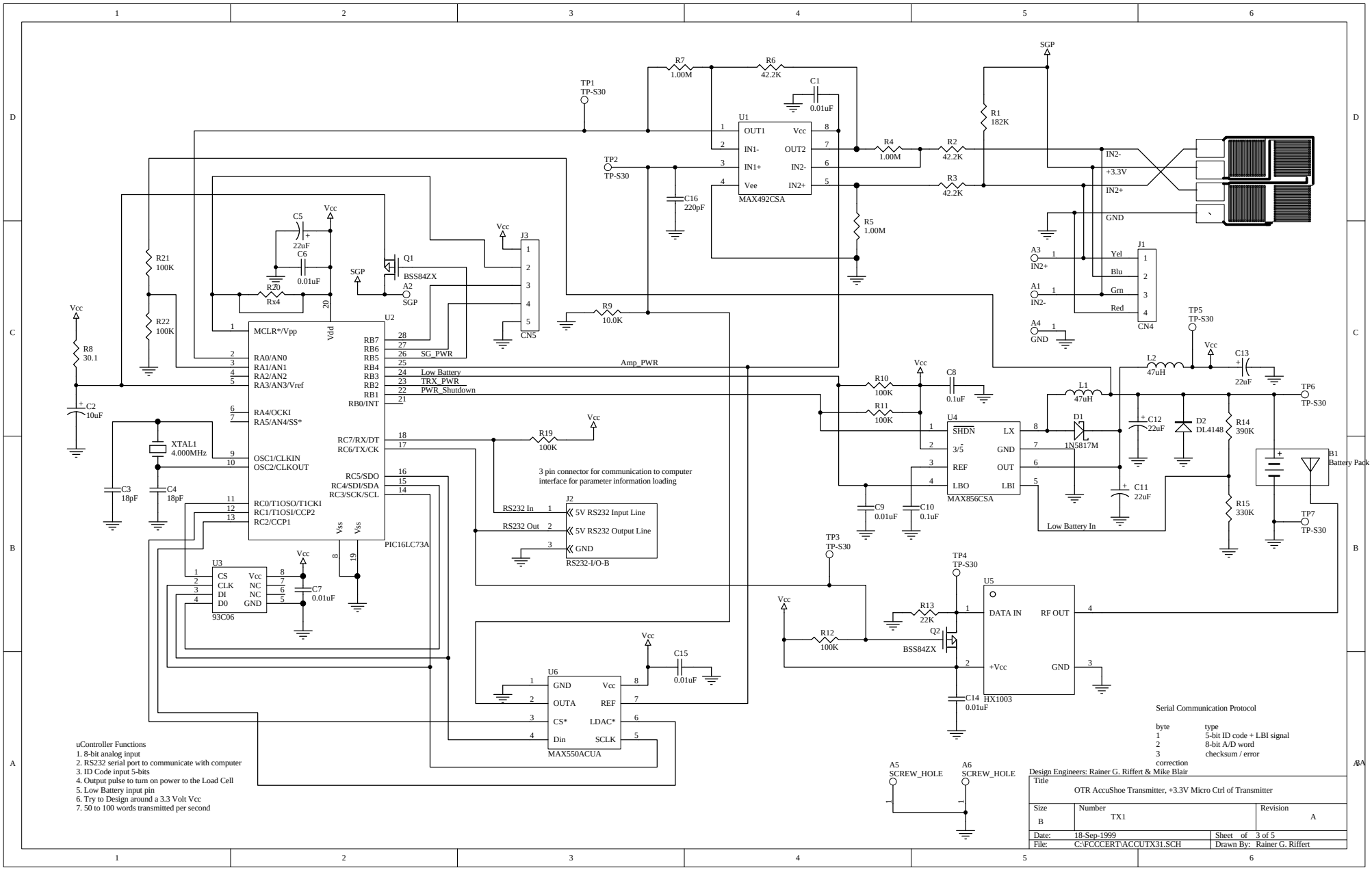
U1
MAX492CSA
OUT1
IN1-
IN1+
Vee
Vcc
OUT2
IN2-
IN2+
R7 1.00M
R6 42.2K
C1 0.01uF
R4 1.00M
R2 42.2K
R3 42.2K
R5 1.00M
R1 182K
C16 220pF
TP1 TP-S30
TP2 TP-S30
SGP
IN2-
+3.3V
IN2+
GND
J1
CN4
Yel
Blu
Grn
Red
A3 IN2+
A1 IN2-
A4 GND
U2
PIC16LC73A
MCLR*/Vpp
RA0/AN0
RA1/AN1
RA2/AN2
RA3/AN3/Vref
RA4/OCKI
RA5/AN4/SS*
OSC1/CLKIN
OSC2/CLKOUT
RC0/T1OSO/T1CKI
RC1/T1OSI/CCP2
RC2/CCP1
RC7/RX/DT
RC6/TX/CK
RC5/SDO
RC4/SDI/SDA
RC3/SCK/SCL
RB7
RB6
RB5
RB4
RB3
RB2
RB1
RB0/INT
Vdd
Vss
SG_PWR
Low Battery
TRX_PWR
PWR_Shutdown
Amp_PWR
R8 30.1
C2 10uF
R21 100K
R22 100K
C5 22uF
C6 0.01uF
R20 Rx4
Q1 BSS84ZX
A2 SGP
XTAL1 4.000MHz
C3 18pF
C4 18pF
J3
CN5
R9 10.0K
R19 100K
3 pin connector for communication to computer interface for parameter information loading
J2
RS232-I/O-B
RS232 In
RS232 Out
5V RS232 Input Line
5V RS232 Output Line
GND
U3
93C06
CS
CLK
DI
D0
NC
C7 0.01uF
U6
MAX550ACUA
GND
OUTA
CS*
Din
REF
LDAC*
SCLK
C15 0.01uF
R10 100K
R11 100K
C8 0.1uF
U4
MAX856CSA
SHDN
3/5
REF
LBO
LX
OUT
LBI
C9 0.01uF
C10 0.1uF
L1 47uH
D1 1N5817M
L2 47uH
C13 22uF
C12 22uF
C11 22uF
D2 DL4148
R14 390K
R15 330K
Low Battery In
TP5 TP-S30
TP6 TP-S30
TP7 TP-S30
B1 Battery Pack
TP3 TP-S30
TP4 TP-S30
R12 100K
R13 22K
Q2 BSS84ZX
U5
HX1003
DATA IN
+Vcc
RF OUT
GND
C14 0.01uF
A5 SCREW_HOLE
A6 SCREW_HOLE
uController Functions
1. 8-bit analog input
2. RS232 serial port to communicate with computer
3. ID Code input 5-bits
4. Output pulse to turn on power to the Load Cell
5. Low Battery input pin
6. Try to Design around a 3.3 Volt Vcc
7. 50 to 100 words transmitted per second
Serial Communication Protocol
byte type
1 5-bit ID code + LBI signal
2 8-bit A/D word
3 checksum / error correction
Design Engineers: Rainer G. Riffert & Mike Blair
Title
OTR AccuShoe Transmitter, +3.3V Micro Ctrl of Transmitter
Size B
Number TX1
Revision A
Date: 18-Sep-1999
Sheet of 3 of 5
File: C:\FCCCERT\ACCUTX31.SCH
Drawn By: Rainer G. Riffert