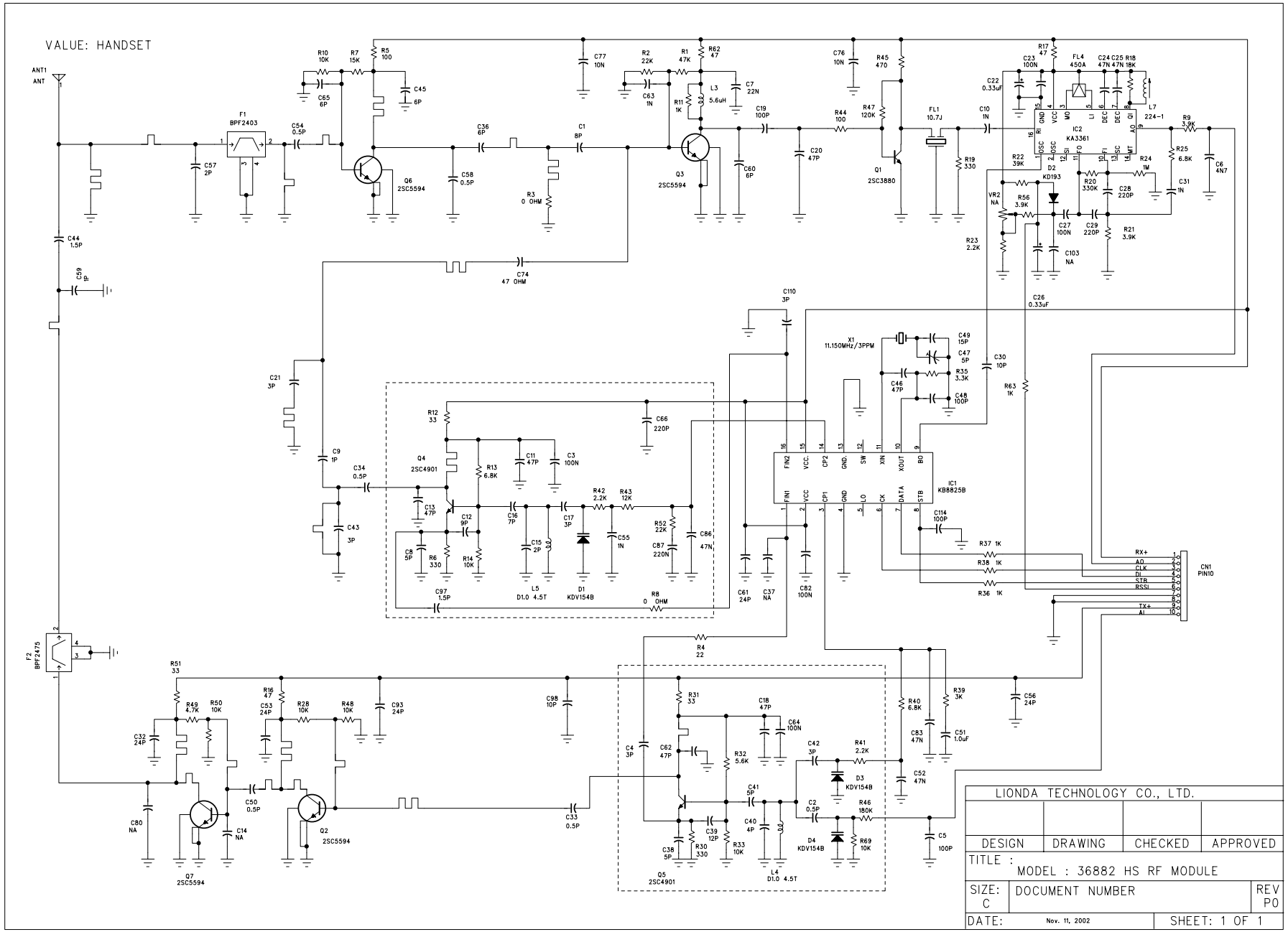
VALUE: HANDSET
ANT1
ANT
F1
BPF2403
Q6
2SC5594
Q3
2SC5594
Q1
2SC3880
FL1
10.7J
FL4
450A
IC2
KA3361
D2
KD193
X1
11.150MHz/3PPM
IC1
KB8825B
Q4
2SC4901
D1
KDV154B
L5
D1.0 4.5T
F2
BPF2475
Q7
2SC5594
Q2
2SC5594
Q5
2SC4901
D3
KDV154B
D4
KDV154B
L4
D1.0 4.5T
CN1
PIN10
RX+
AO
CLK
DI
STB
RSSI
TX+
AI
LIONDA TECHNOLOGY CO., LTD.
DESIGN
DRAWING
CHECKED
APPROVED
TITLE :
MODEL : 36882 HS RF MODULE
SIZE:
C
DOCUMENT NUMBER
REV
P0
DATE:
Nov. 11, 2002
SHEET: 1 OF 1