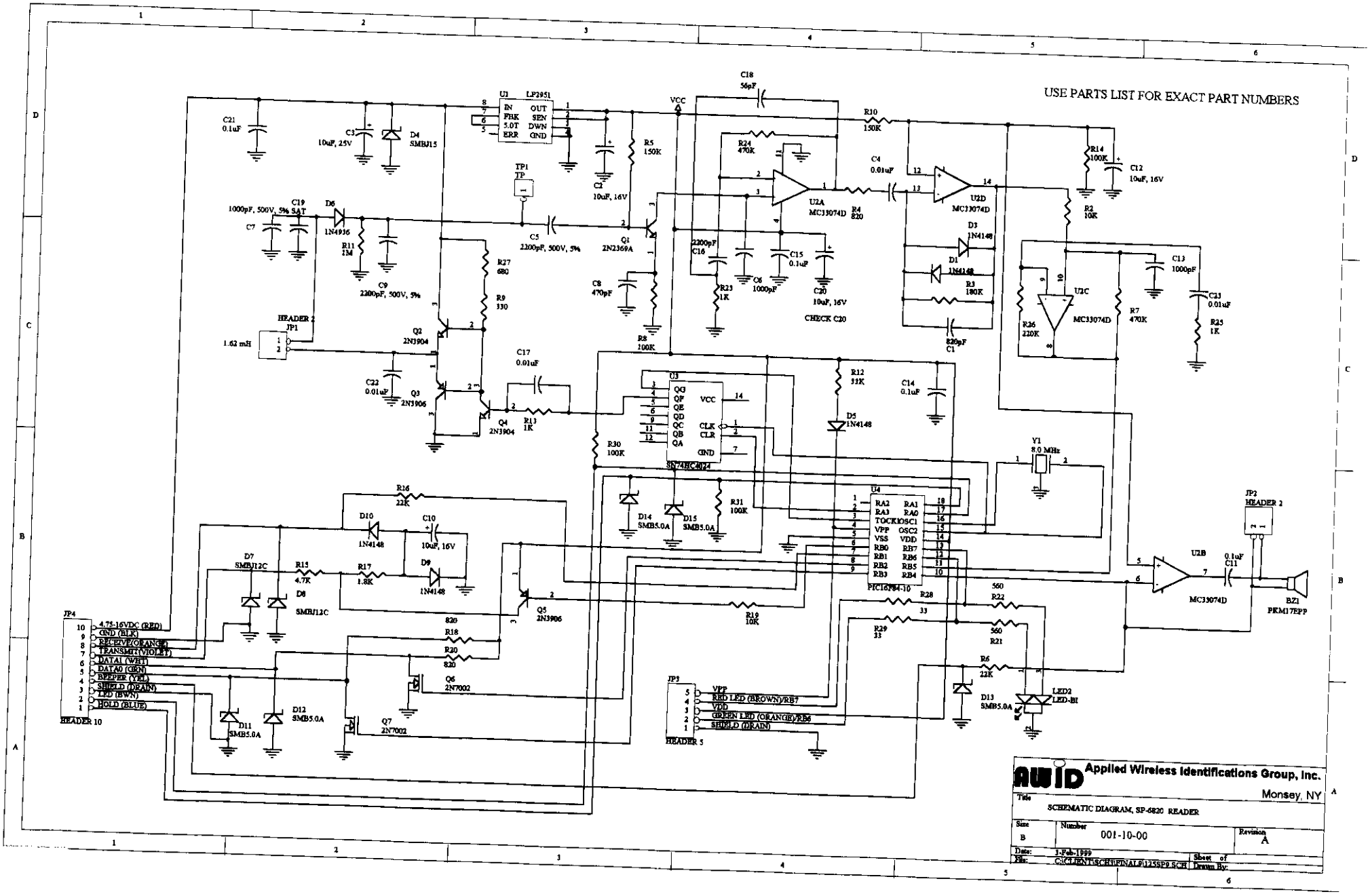
USE PARTS LIST FOR EXACT PART NUMBERS
U1 LF2951
IN OUT
FBK SEN
5.0T DWN
ERR GND
C21 0.1uF
C3 10uF, 25V
D4 SMBJ15
C2 10uF, 16V
R5 150K
VCC
C18 56pF
R10 150K
R24 470K
U2A MC33074D
R4 820
C4 0.01uF
U2D MC33074D
R14 100K
C12 10uF, 16V
R2 10K
TP1 TP
C19 1000pF, 500V, 5% SAT
D6 1N4936
C7
R11 1M
C9 2200pF, 500V, 5%
C5 2200pF, 500V, 5%
Q1 2N2369A
C8 470pF
R8 100K
2200pF C16
C6 1000pF
C15 0.1uF
C20 10uF, 16V
CHECK C20
R23 1K
D3 1N4148
D1 1N4148
R3 180K
820pF C1
U2C MC33074D
R36 220K
R7 470K
C13 1000pF
C23 0.01uF
R25 1K
HEADER 2 JP1
1.62 mH
R27 680
R9 330
Q2 2N3904
Q3 2N3906
C22 0.01uF
C17 0.01uF
Q4 2N3904
R13 1K
U3 SN74HC4024
QG QF QE QD QC QB QA
VCC CLK CLR GND
R12 33K
C14 0.1uF
D5 1N4148
R30 100K
Y1 8.0 MHz
R16 22K
D10 1N4148
C10 10uF, 16V
D9 1N4148
D7 SMBJ12C
D8 SMBJ12C
R15 4.7K
R17 1.8K
D14 SMB5.0A
D15 SMB5.0A
R31 100K
U4 PIC16F84-10
RA2 RA3 TOCKI VPP VSS RB0 RB1 RB2 RB3
RA1 RA0 OSC1 OSC2 VDD RB7 RB6 RB5 RB4
JP2 HEADER 2
U2B MC33074D
C11 0.1uF
BZ1 PRM17EPP
Q5 2N3906
R19 10K
R28 33
R29 33
560 R22
560 R21
R18 820
R20 820
Q6 2N7002
Q7 2N7002
R6 22K
D13 SMB5.0A
LED2 LED-BI
D11 SMB5.0A
D12 SMB5.0A
JP4 HEADER 10
4.75-16VDC (RED)
GND (BLK)
RECEIVE (ORANGE)
TRANSMIT (VIOLET)
DATA1 (WHT)
DATA0 (GRN)
BEEPER (YEL)
SHIELD (DRAIN)
LED (BWN)
HOLD (BLUE)
JP5 HEADER 5
VPP
RED LED (BROWN)/RB7
VDD
GREEN LED (ORANGE)/RB6
SHIELD (DRAIN)
AWID Applied Wireless Identifications Group, Inc.
Monsey, NY
Title
SCHEMATIC DIAGRAM, SP-5820 READER
Size B
Number 001-10-00
Revision A
Date: 3-Feb-1999
File: C:\CLIENT\SCH\FINAL\0125SP0.SCH
Sheet of
Drawn By: