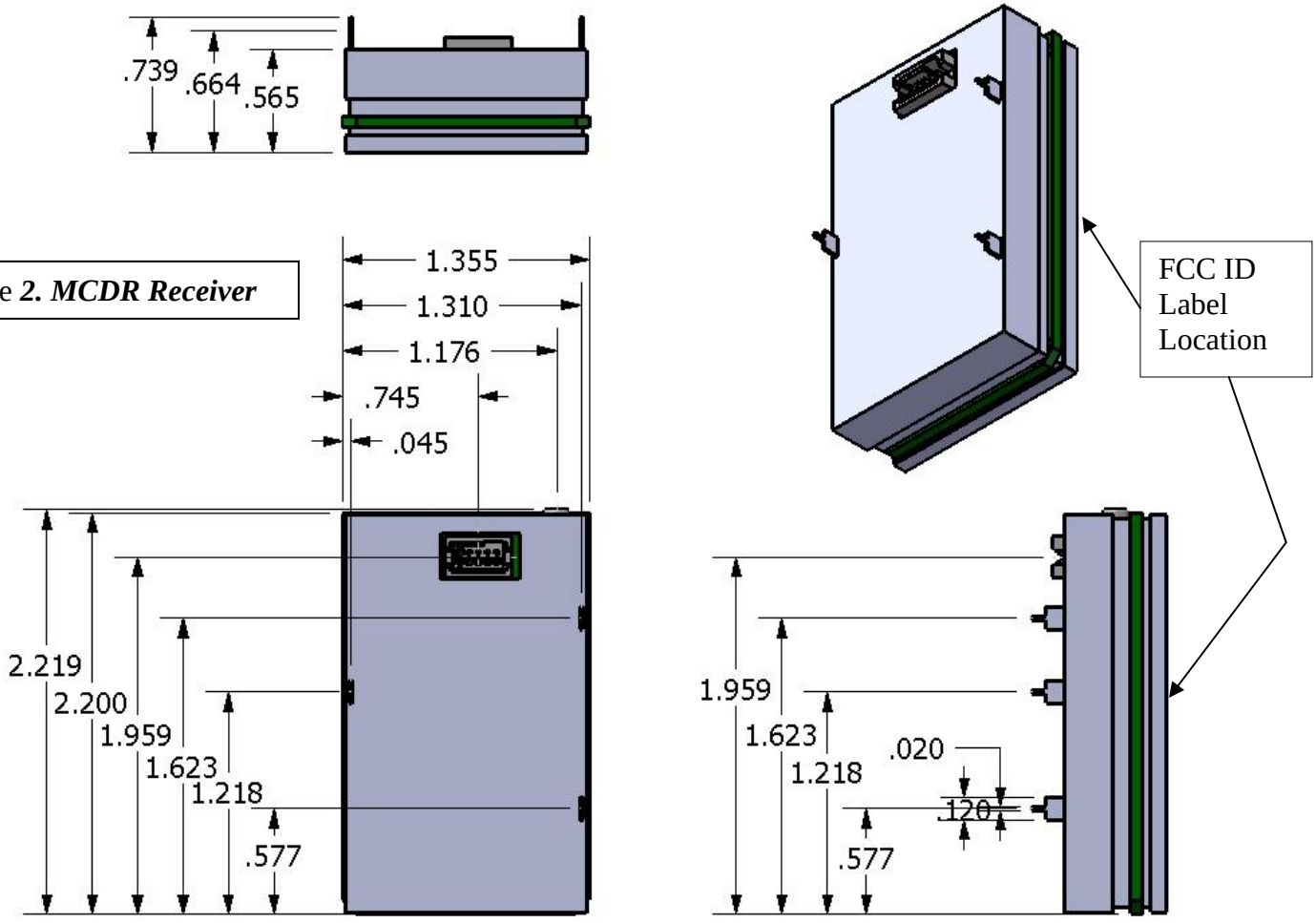Figure *2. MCDR Receiver*