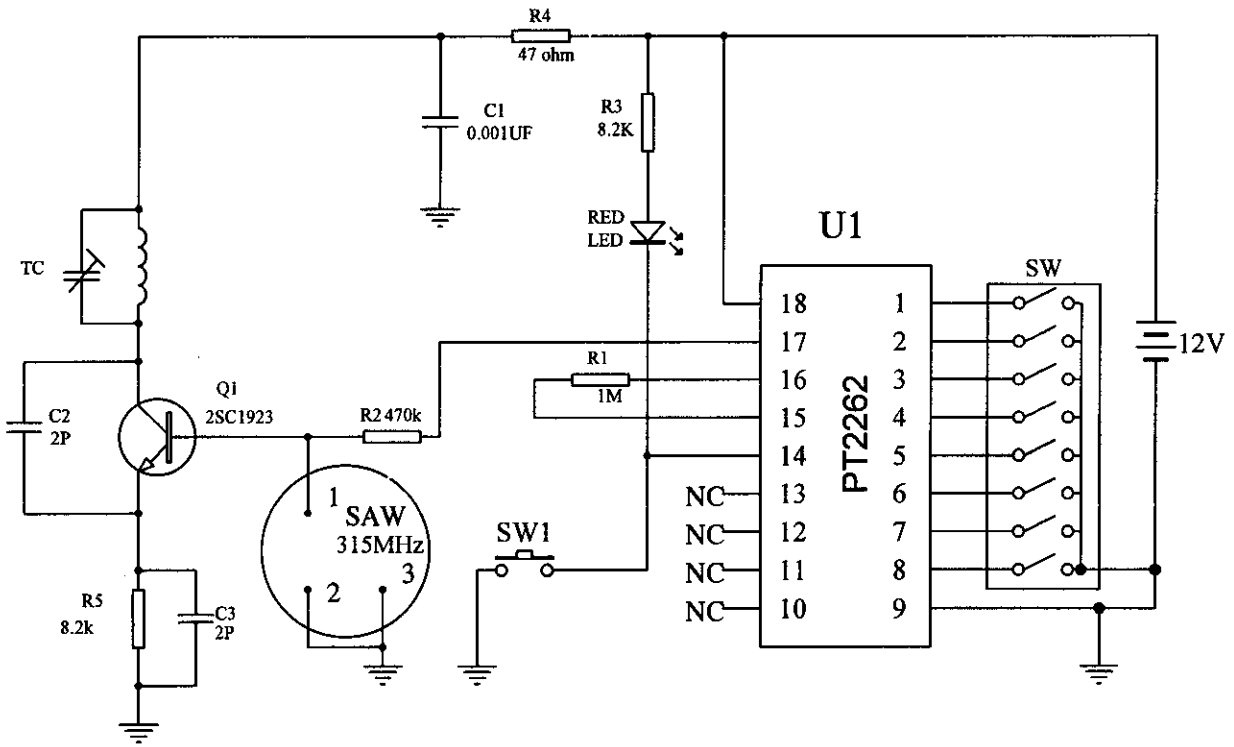

Title		
CP COMPACT PROUCTS LTD		
Size: A4	Number: PBT300	Revision: REV-B
Date: 23-Oct-2000	Sheet of 1/1	
File: C:\PBT300.SCH	Drawn By: QYX	