4. SYSTEM SCHEMATICS

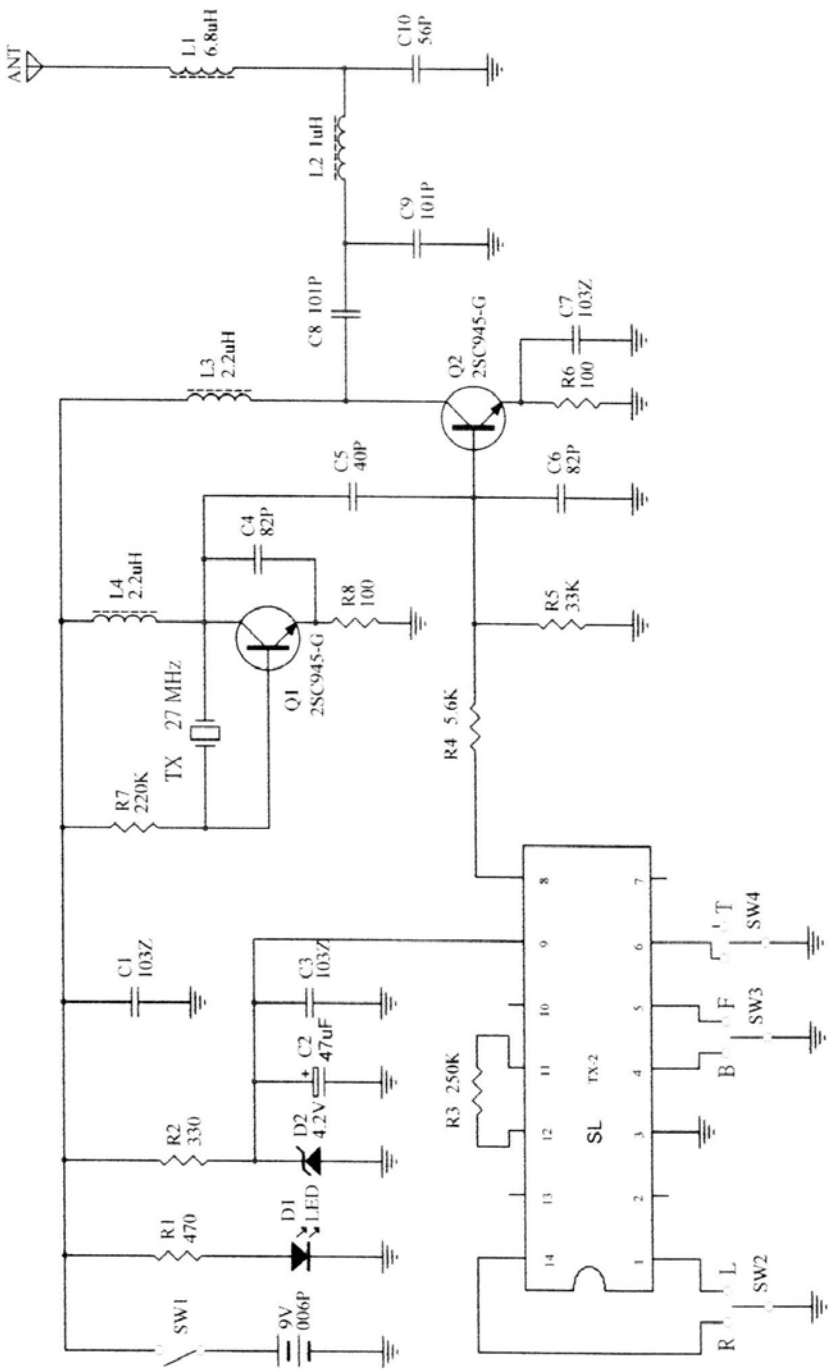

Figure 4.1 System Schematics