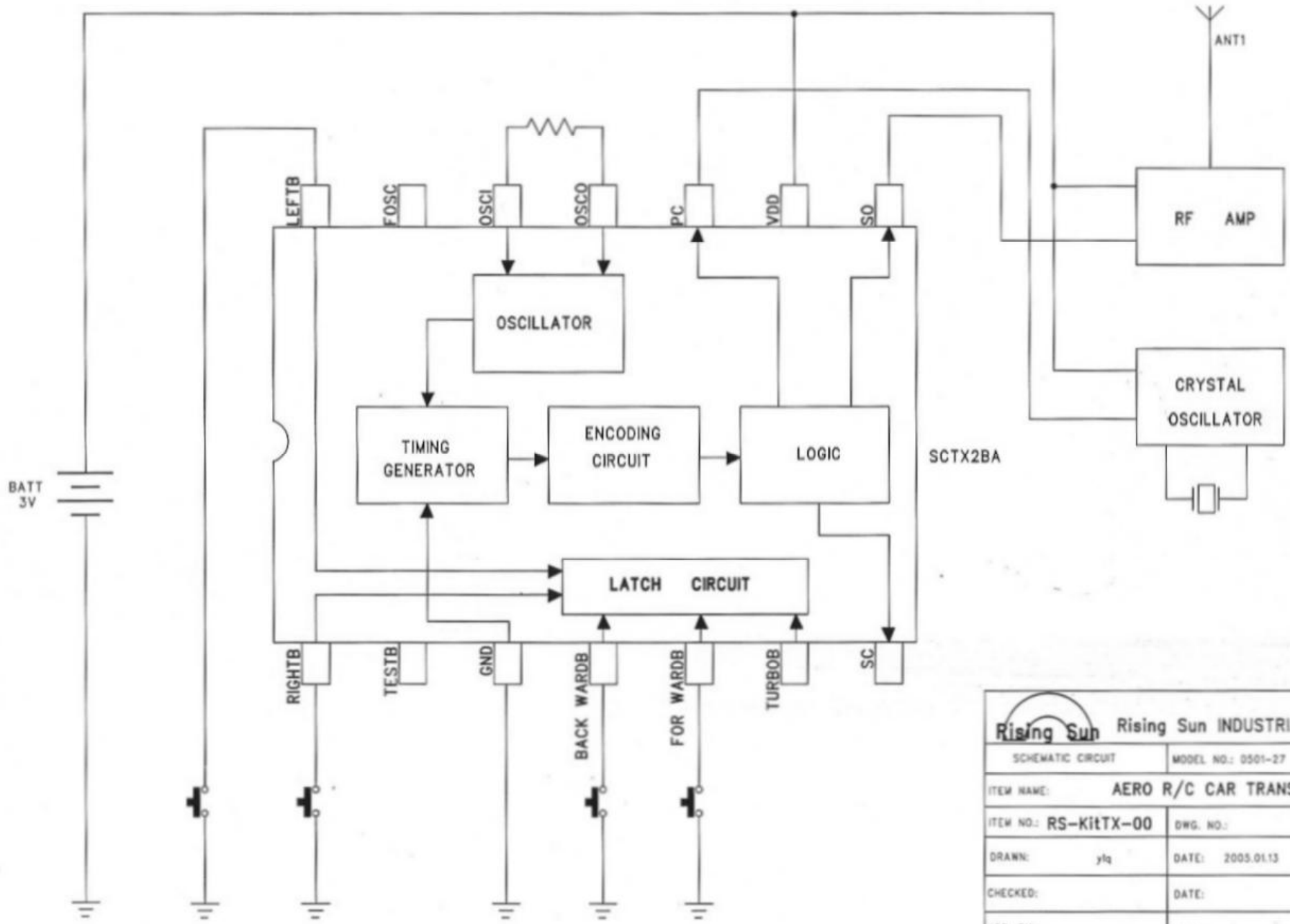

Rising Sun	Rising Sun INDUSTRIAL COMPANY	
SCHEMATIC CIRCUIT	MODEL NO.: 0501-27	
ITEM NAME:	AERO R/C CAR TRANSMITTER	
ITEM NO.: RS-KitTX-00	DWG. NO.:	REV: 00
DRAWN: ylq	DATE: 2005.01.13	
CHECKED:	DATE:	SHEET: 1 OF 1
APP. BY:	DATE:	