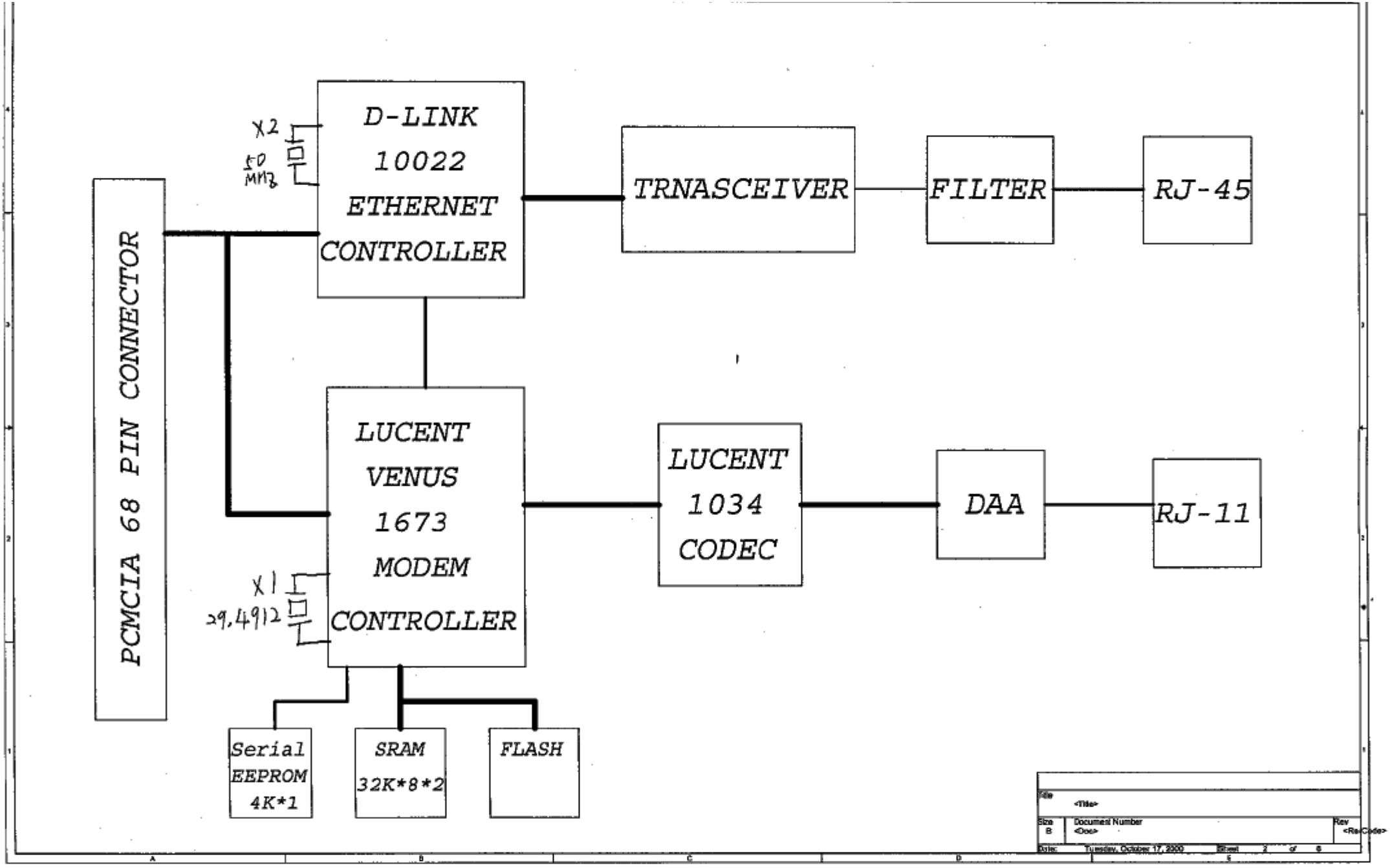
PCMCIA 68 PIN CONNECTOR
X2
50 MHz
D-LINK 10022 ETHERNET CONTROLLER
TRNASCEIVER
FILTER
RJ-45
LUCENT VENUS 1673 MODEM CONTROLLER
X1
29.4912
LUCENT 1034 CODEC
DAA
RJ-11
Serial EEPROM 4K*1
SRAM 32K*8*2
FLASH
Title
<Title>
Size B
Document Number
<Doc>
Rev
<RevCode>
Date: Tuesday, October 17, 2000
Sheet 2 of 8