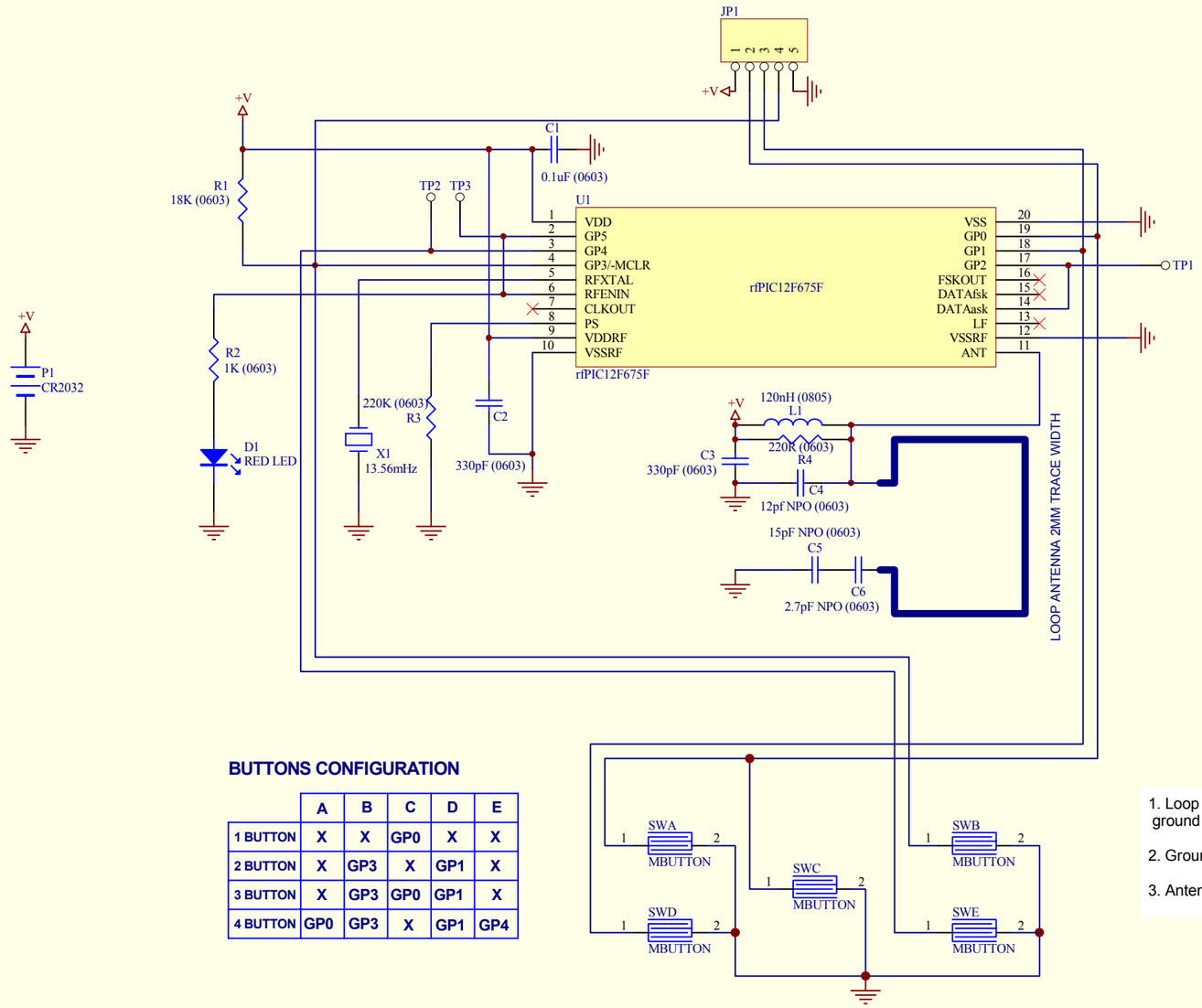

BUTTONS CONFIGURATION

	A	B	C	D	E
1 BUTTON	X	X	GP0	X	X
2 BUTTON	X	GP3	X	GP1	X
3 BUTTON	X	GP3	GP0	GP1	X
4 BUTTON	GP0	GP3	X	GP1	GP4

1. Loop Antenna to be 69mm long and 2mm wide. No ground plane under loop antenna.

2. Ground plane under crystal and wherever possible

3. Antenna to be kept away from sensitive inputs.

ACTIVE CONTROL TECHNOLOGIES INC.
1300 SHAWSON DRIVE, SUITE#201
MISSISSAUGA, ONTARIO, L4W-1C3
Tel: 905 670 5500
Fax: 905 670 2345

PLLM (Mircrochip version)

Size	FCSM No.	DWG No.	Rev
A3		SCH-016	0

Scale		Sheet
		1 of 1