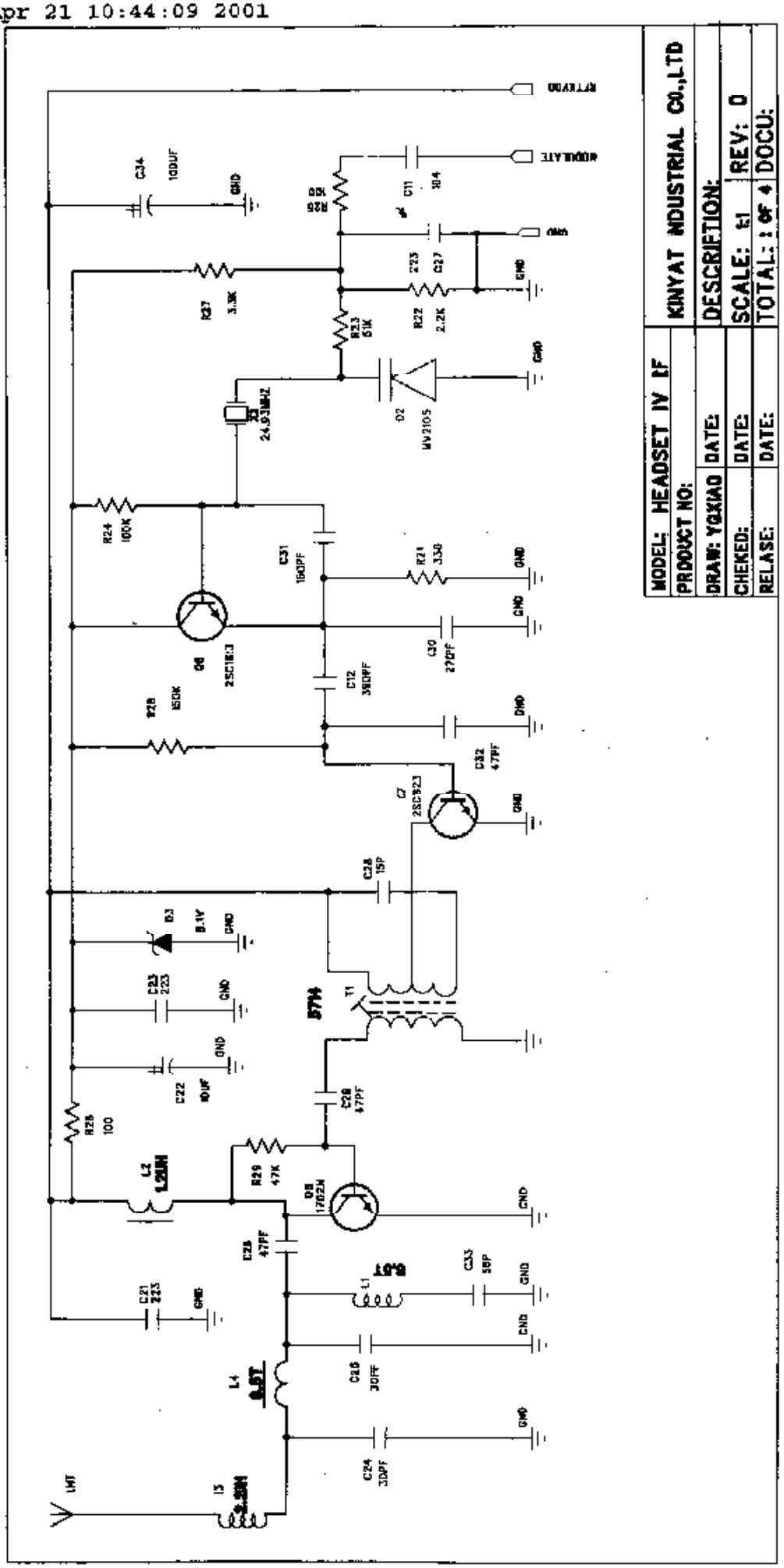
RETURN
MODULATE
GND
C34 10UF
R26 150
C11 104
R27 3.3K
C23 223
C27
R22 2.2K
R23 51K
D2 MV2105
X1 24.93MHZ
R24 100K
C31 180PF
R21 330
C30 270PF
Q6 2SC1813
C12 390PF
R28 150K
C32 47PF
Q7 2SC923
C28 15P
D3 8.1V
C23 223
T1
C22 10UF
C26 47PF
R25 100
L2 1.2UH
R29 47K
D8 1N52A
C25 47PF
C33 39P
L1 0.5T
C21 223
C16 30PF
L4 0.5T
C24 30PF
L3 2.5UH
LMT
MODEL: HEADSET IV IF
PRODUCT NO:
DRAW: YQXIAO
DATE:
CHEKED:
DATE:
RELASE:
DATE:
KINYAT INDUSTRIAL CO.,LTD
DESCRIPTION:
SCALE: 1:1
REV: 0
TOTAL: 1 OF 4
DOCU:

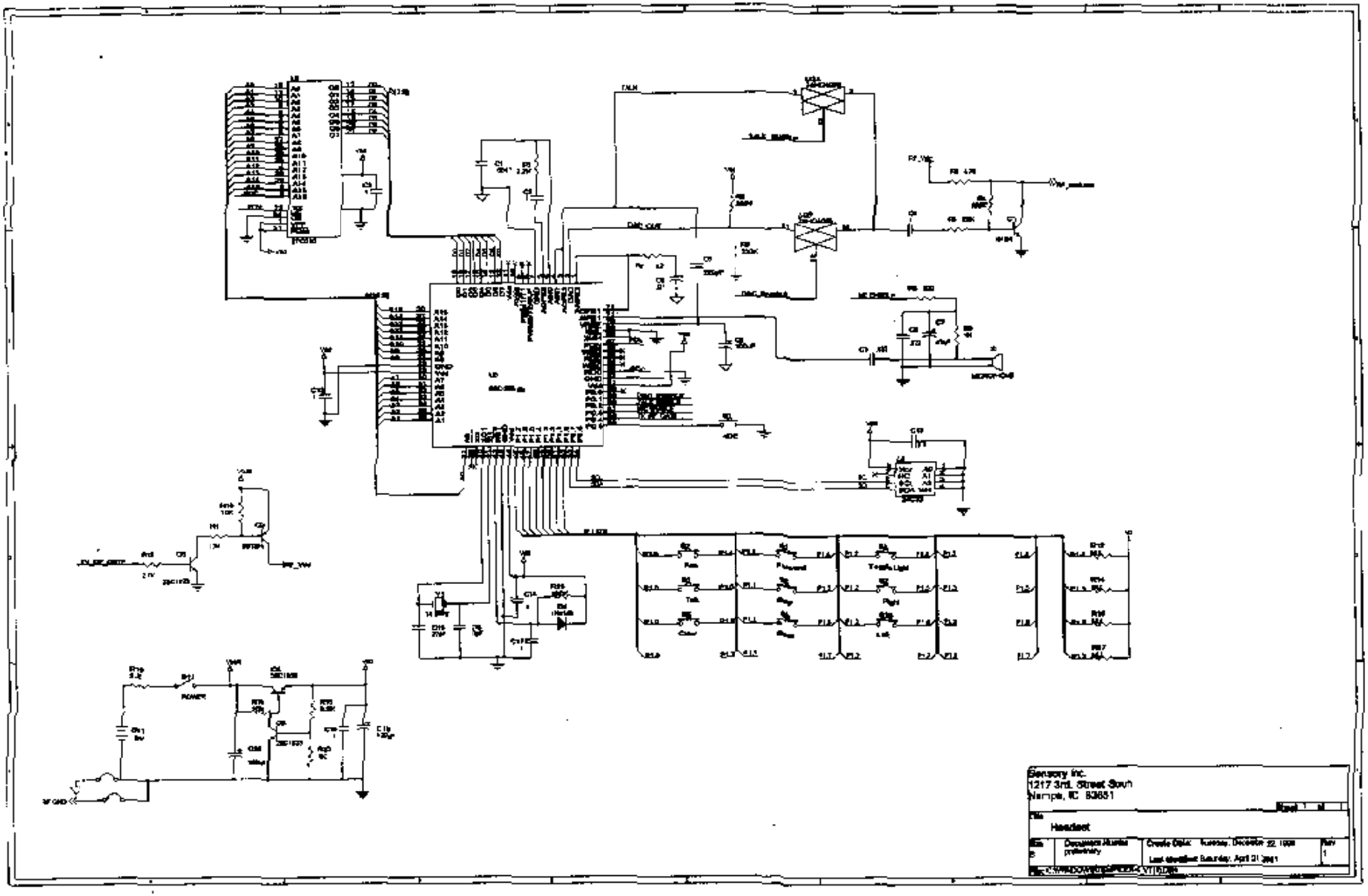
Sensory Inc.
1217 3rd Street South
Nampa, ID 83651
Sheet 1 of 1
Headset
Size B
Document Number
preliminary
Rev
1
Tuesday, April 31, 2001