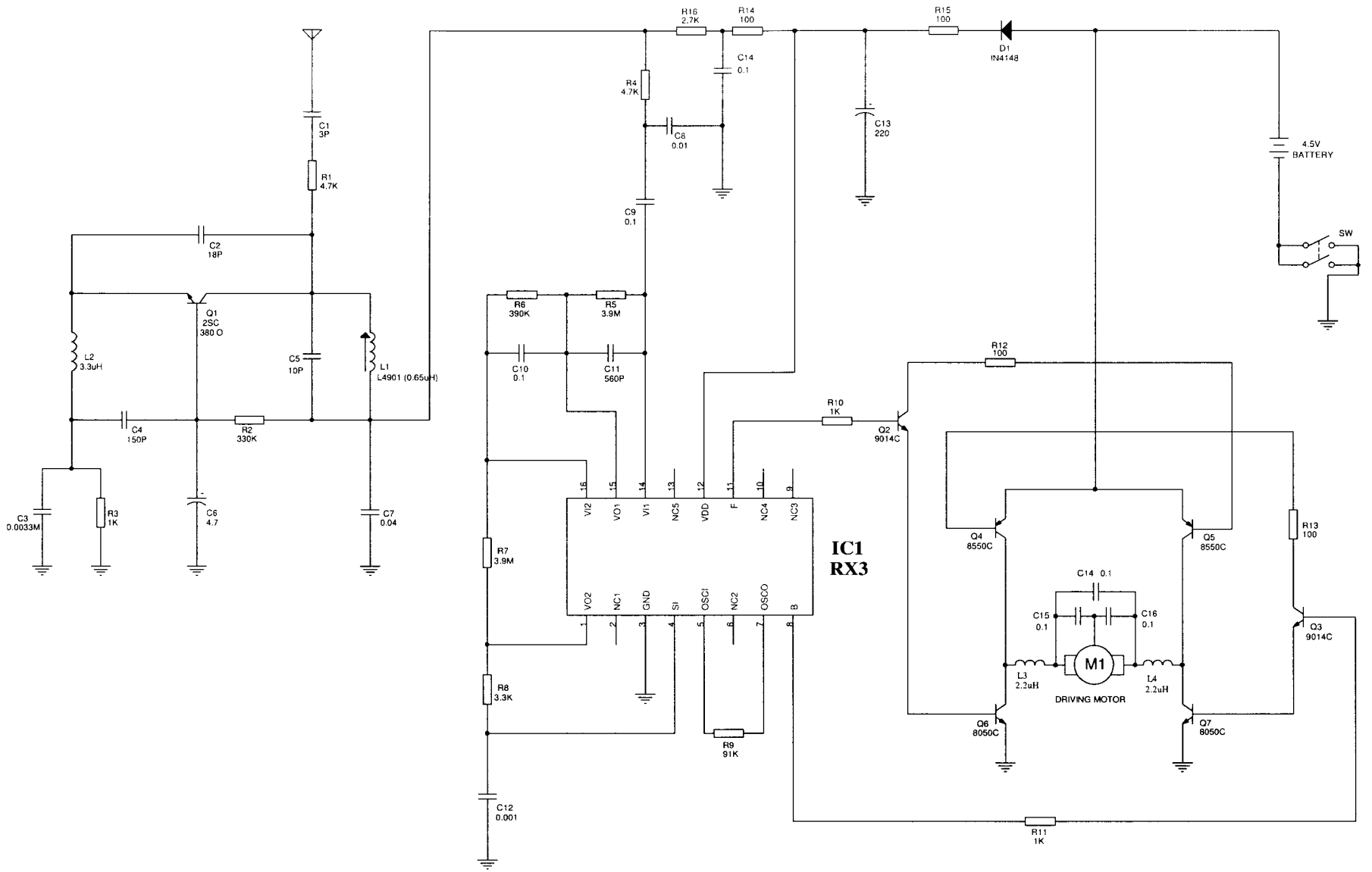

Note:

1.All resistance values are indicated in "ohm"
(Mohm=1,000Kohm ; Kohm=1,000 ohm)

2.All capacitance values are indictaed in "uF"
(uF=1,000nF ; nF=1,000pF)

Remote Control Receiver 49 Rx
Model 32066
L9G32066R

ARTIN Industrial Co., Ltd.		
Title	(BATTERY: 3* 1.5V"AA")	
	Remote Control Receiver 49 Rx	
Size A4	Document Number MCS: 317002068-010	Rev 0
	Receiver 49.86Mhz (PCB SR-3310)	
Revise Date: Thursday, June 09, 2005	Sheet 1 of 1	