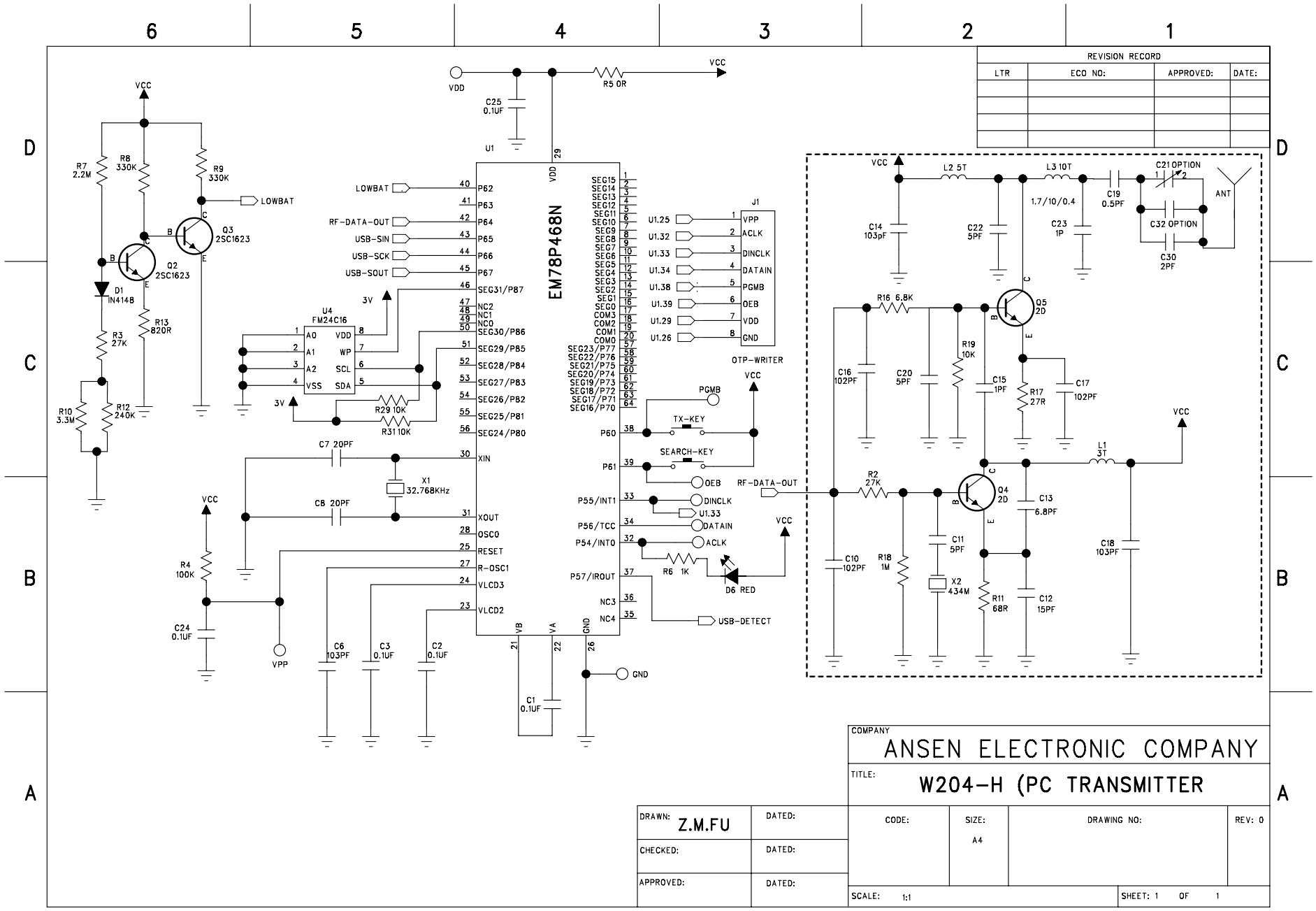
REVISION RECORD
LTR
ECO NO:
APPROVED:
DATE:
VCC
VDD
C25 0.1UF
R5 0R
U1
EM78P468N
LOWBAT
RF-DATA-OUT
USB-SIN
USB-SCK
USB-SOUT
P62
P63
P64
P65
P66
P67
SEG31/P87
NC2
NC1
NC0
SEG30/P86
SEG29/P85
SEG28/P84
SEG27/P83
SEG26/P82
SEG25/P81
SEG24/P80
XIN
XOUT
OSC0
RESET
R-OSC1
VLCD3
VLCD2
VB
VA
GND
P60
P61
P55/INT1
P56/TCC
P54/INT0
P57/IROUT
NC3
NC4
U1.25
U1.32
U1.33
U1.34
U1.38
U1.39
U1.29
U1.26
J1
VPP
ACLK
DINCLK
DATAIN
PGMB
OEB
VDD
GND
OTP-WRITER
PGMB
TX-KEY
SEARCH-KEY
OEB
DINCLK
U1.33
DATAIN
ACLK
R6 1K
D6 RED
USB-DETECT
U4
FM24C16
A0
A1
A2
VSS
VDD
WP
SCL
SDA
3V
R29 10K
R31 10K
C7 20PF
C8 20PF
X1
32.768KHz
R4 100K
C24 0.1UF
VPP
C6 103PF
C3 0.1UF
C2 0.1UF
C1 0.1UF
R7 2.2M
R8 330K
R9 330K
Q3 2SC1623
Q2 2SC1623
D1 IN4148
R13 820R
R3 27K
R10 3.3M
R12 240K
L2 5T
L3 10T
1.7/10/0.4
C19 0.5PF
C21 OPTION
C32 OPTION
C30 2PF
ANT
C14 103pF
C22 5PF
C23 1P
R16 6.8K
Q5 2D
R19 10K
C16 102PF
C20 5PF
C15 1PF
R17 27R
C17 102PF
L1 3T
R2 27K
Q4 2D
C13 6.8PF
C10 102PF
R18 1M
C11 5PF
X2 434M
R11 68R
C12 15PF
C18 103PF
COMPANY
ANSEN ELECTRONIC COMPANY
TITLE:
W204-H (PC TRANSMITTER
DRAWN: Z.M.FU
DATED:
CHECKED:
DATED:
APPROVED:
DATED:
CODE:
SIZE: A4
DRAWING NO:
REV: 0
SCALE: 1:1
SHEET: 1 OF 1

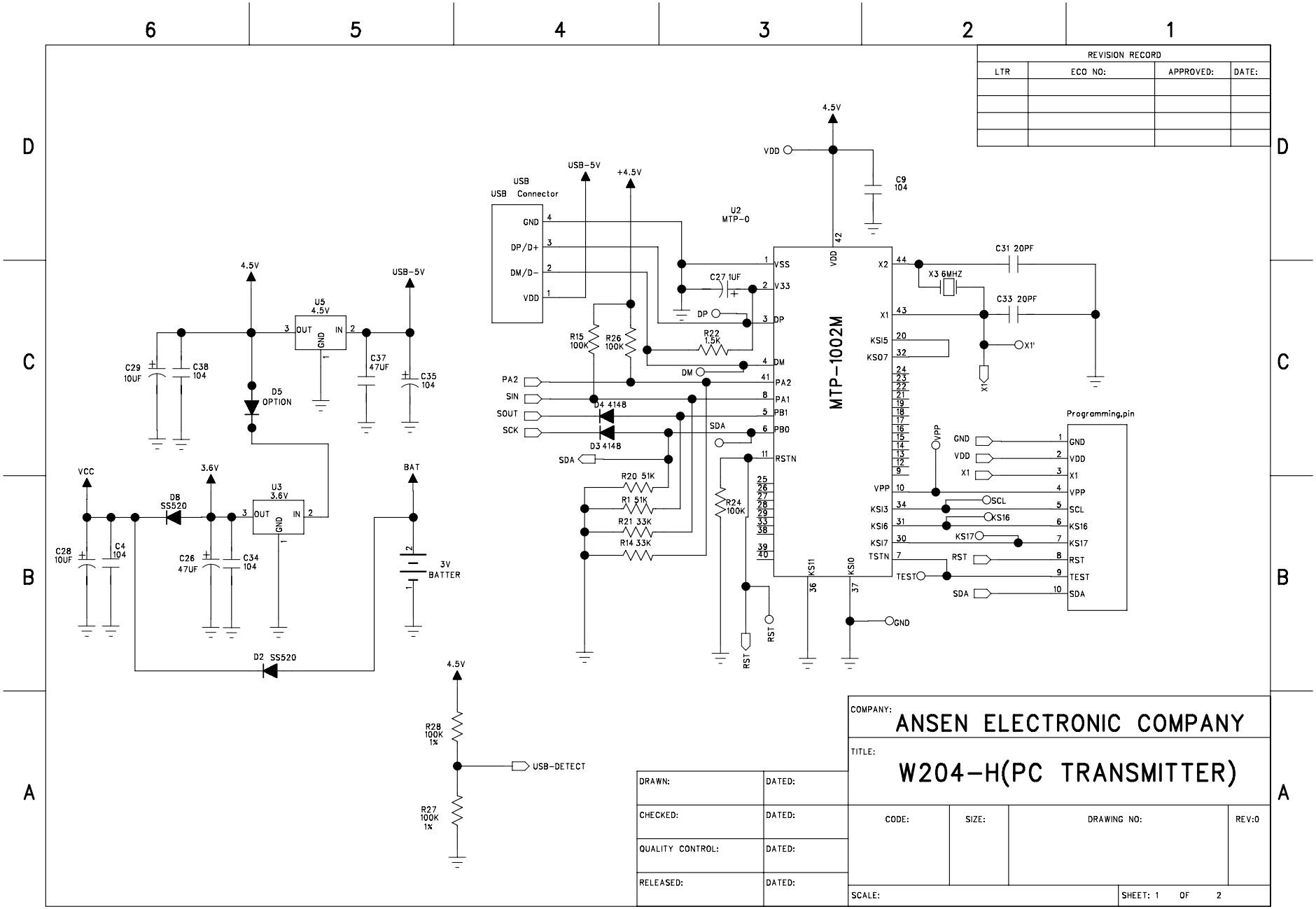
REVISION RECORD
LTR
ECO NO:
APPROVED:
DATE:
USB
USB Connector
GND
DP/D+
DM/D-
VDD
USB-5V
+4.5V
4.5V
U2
MTP-0
C9
104
C27 1UF
R15
100K
R26
100K
R22
1.5K
DP
DM
PA2
SIN
SOUT
SCK
D4 4148
D3 4148
SDA
R20 51K
R1 51K
R21 33K
R14 33K
R24
100K
RST
MTP-1002M
VSS
V33
PA1
PB1
PB0
RSTN
KS11
KS10
X2
X1
KSI5
KSO7
KSI3
KSI6
KSI7
TSTN
VPP
TEST
GND
C31 20PF
X3 6MHZ
C33 20PF
X1'
Programming,pin
SCL
KS16
KS17
U5
4.5V
OUT
IN
C29
10UF
C38
104
C37
47UF
C35
104
D5
OPTION
VCC
3.6V
D8
SS520
U3
3.6V
C28
10UF
C4
104
C26
47UF
C34
104
BAT
3V
BATTER
D2 SS520
R28
100K
1%
R27
100K
1%
USB-DETECT
DRAWN:
DATED:
CHECKED:
DATED:
QUALITY CONTROL:
DATED:
RELEASED:
DATED:
COMPANY:
ANSEN ELECTRONIC COMPANY
TITLE:
W204-H(PC TRANSMITTER)
CODE:
SIZE:
DRAWING NO:
REV:0
SCALE:
SHEET: 1 OF 2