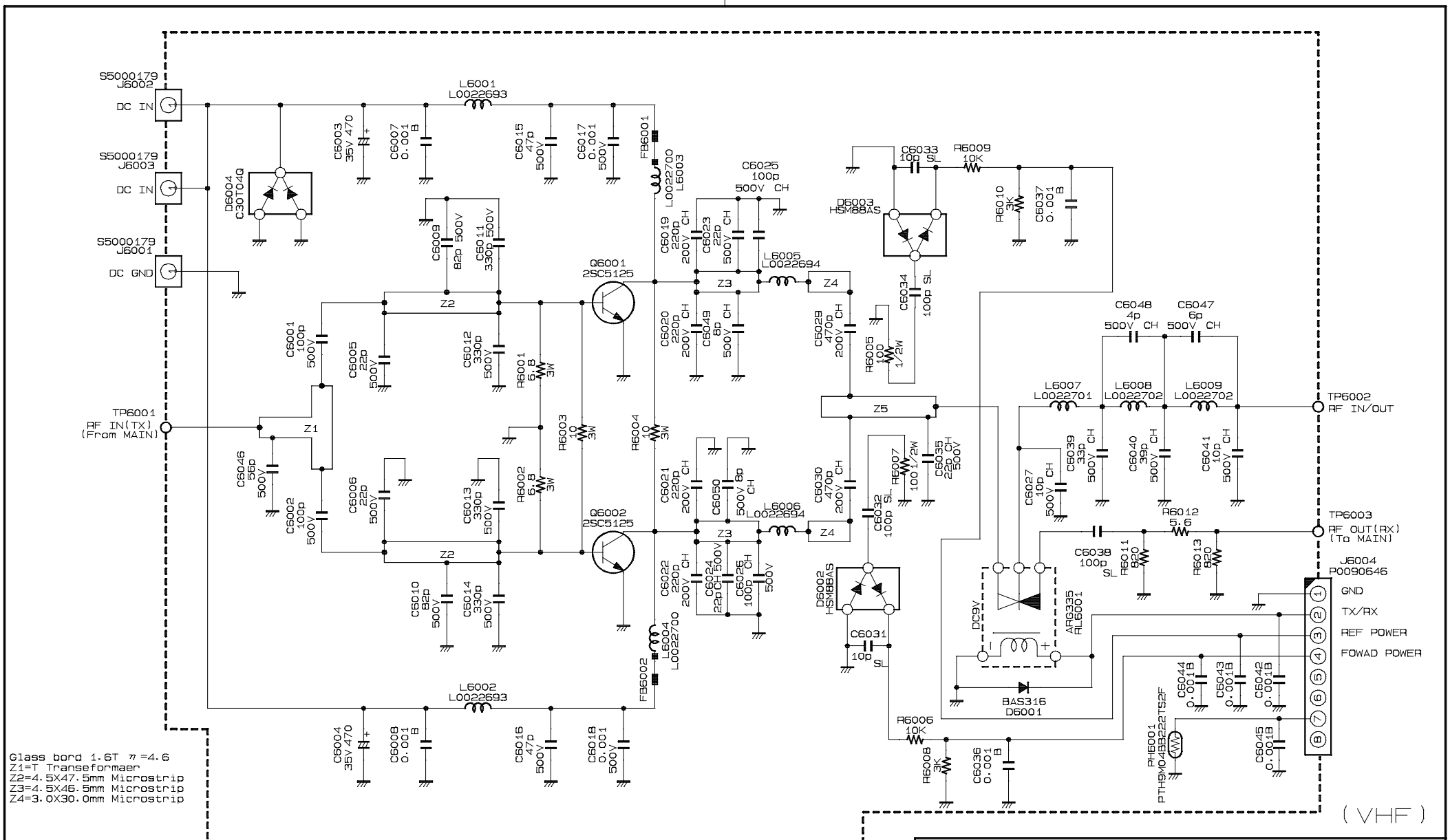

CIRCUIT DIAGRAM	MODEL VX-4000-HiPWR
DES. B-AC024N000/PA-UNIT	
REF. BP009090-FCC.cir/001.sht EDITION	
DATE 01 JUL.,2000	UPDATE 26 JUL.,2000
VERTEX STANDARD CO.,LTD.	

yaesu1 2001.07.27 12:59