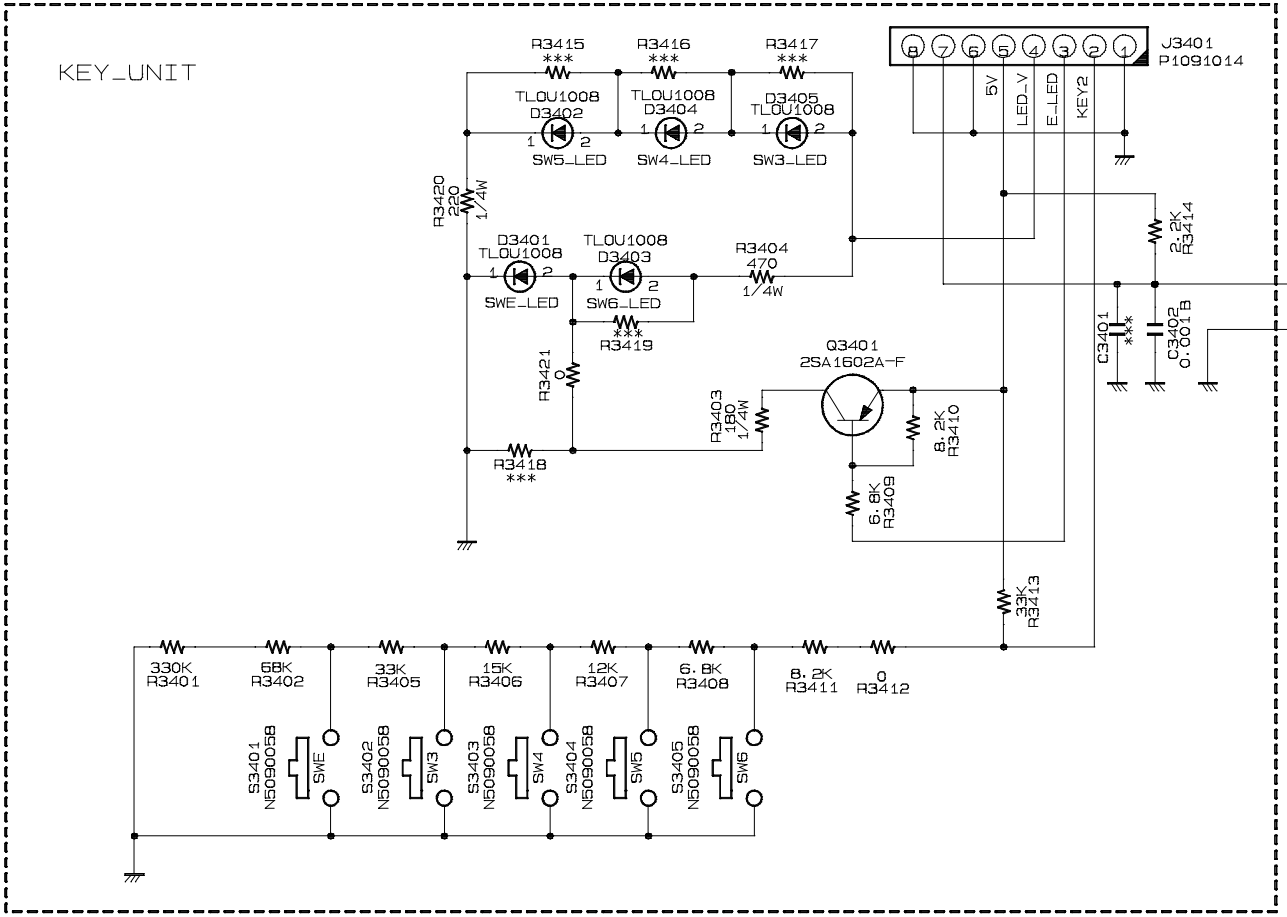

(UHF)

CIRCUIT DIAGRAM	MODEL VX-6000U
DES. B-AC024U000/KEY-UNIT	
REF. BP009960-FCC.cir/001.sht EDITION	
DATE 20 NOV.,2000	UPDATE 16 FEB.,2001
VERTEX STANDARD CO.,LTD.	

yaesu1 2001.06.29 15:34