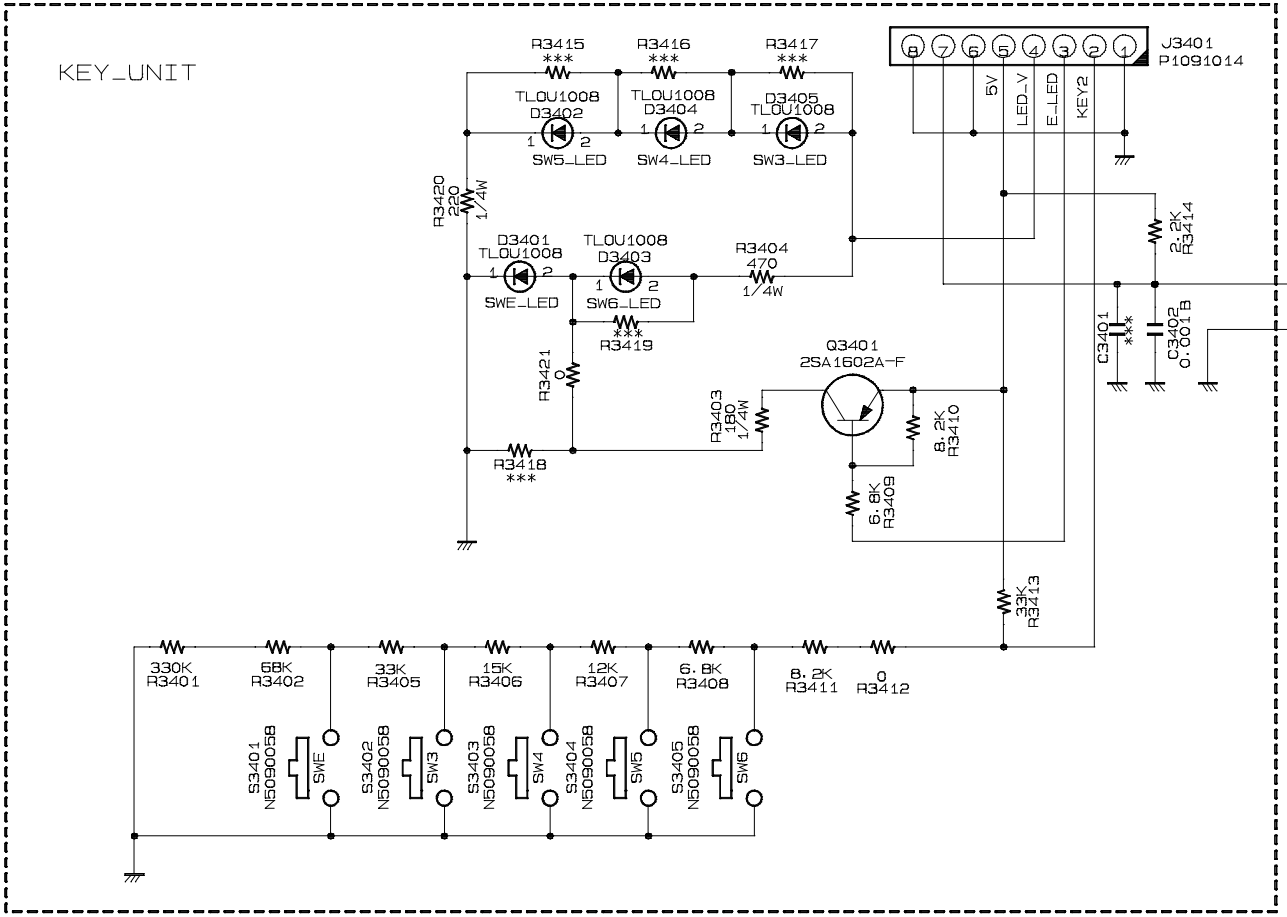

CIRCUIT DIAGRAM	MODEL VX-4000
DES. B-AC005N000/KEY-UNIT	
REF. BP008350D.cir/001.sht	EDITION
DATE 26 JAN.,2000	UPDATE 28 JUN.,2000
YAESU MUSEN CO.,LTD	

yaesu1 2000.06.29 13:50