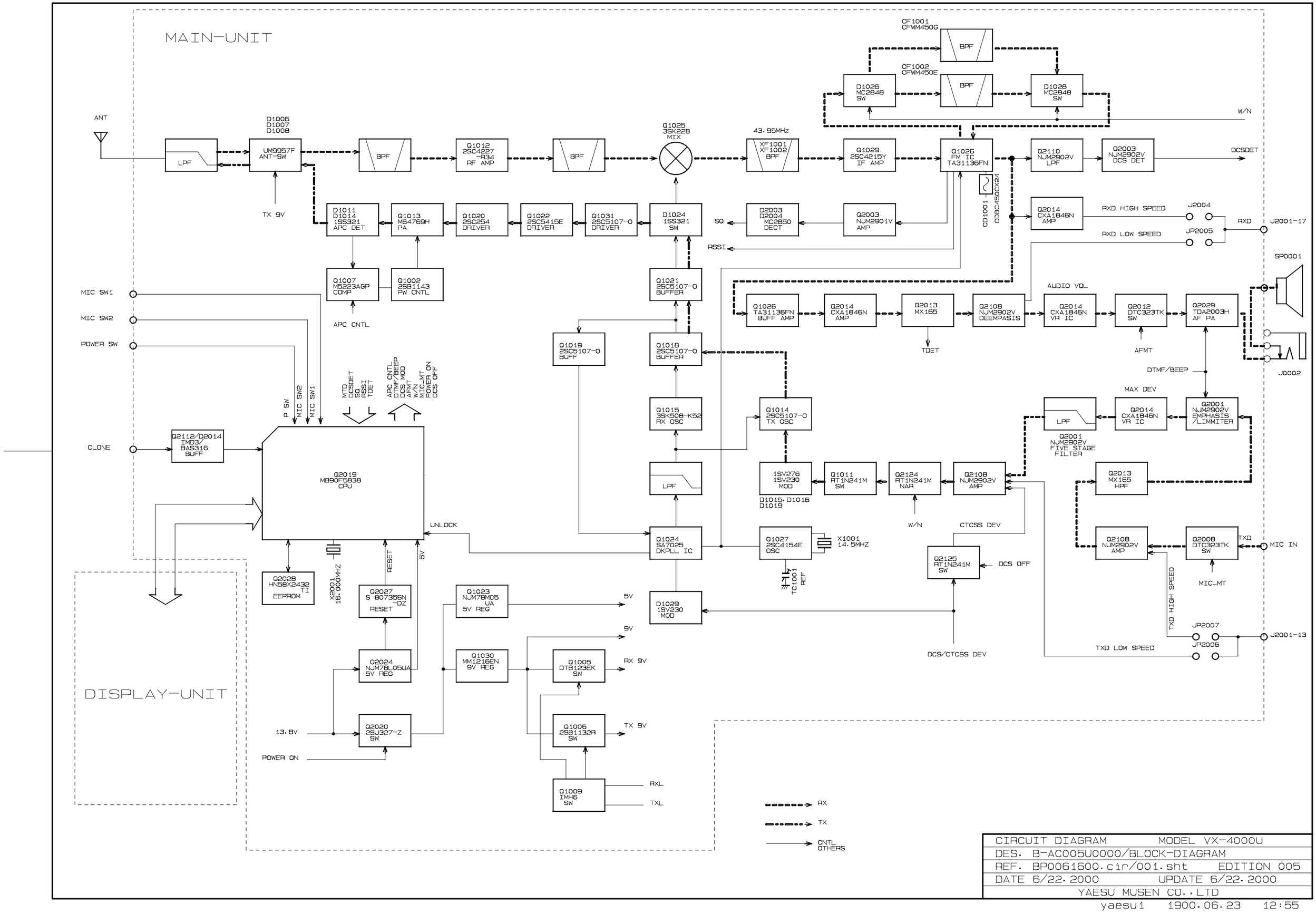

CIRCUIT DIAGRAM	MODEL VX-4000U	
DES. B-AC005U0000/BLOCK-DIAGRAM		
REF. BP0061600.cir/001.sht	EDITION 005	
DATE 6/22.2000	UPDATE 6/22.2000	
YAESU MUSEN CO.,LTD		

yaesu1 1900.06.23 12:55