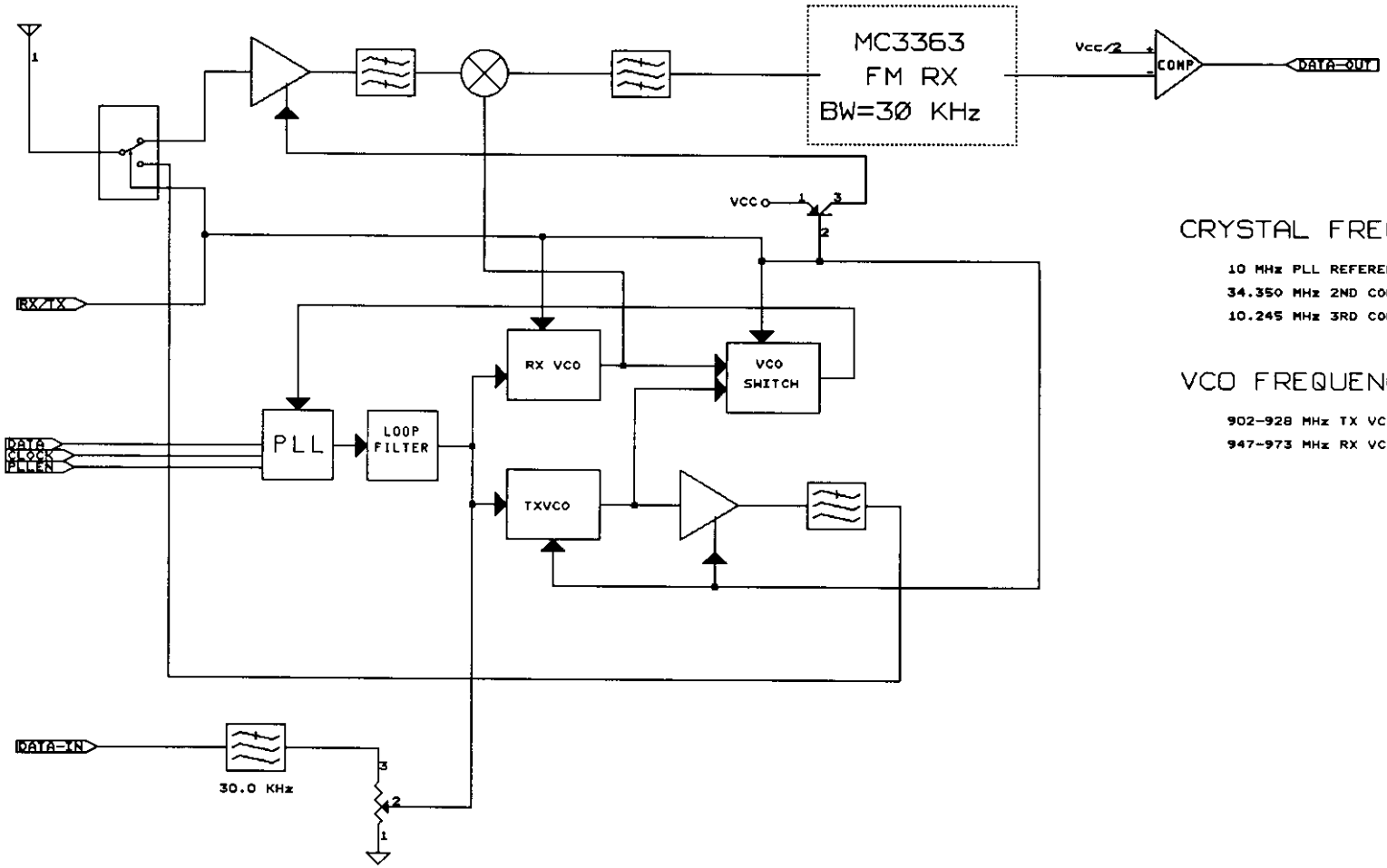

CRYSTAL FREQUENCIES:

10 MHz PLL REFERENCE
34.350 MHz 2ND CONVERSION (3363)
10.245 MHz 3RD CONVERSION (3363)

VCO FREQUENCIES:

902-928 MHz TX VCO
947-973 MHz RX VCO

NOTES:

1). DURING STBY ALL CKTS POWERED DOWN, Vcc REMOVED IF NECESSARY
2). DURING RX, TX IS POWERD DOWN
3). DURING TX, RX IS POWERED DOWN

WORTHINGTON DATA SOLUTIONS 3004 MISSION ST. SUITE 220 SANTA CRUZ, CA. 95060	
Title 900 MHz RADIO BLOCK DIAGRAM	
Size B / Document Number	REV A
Date: September 25, 1996 Sheet of	