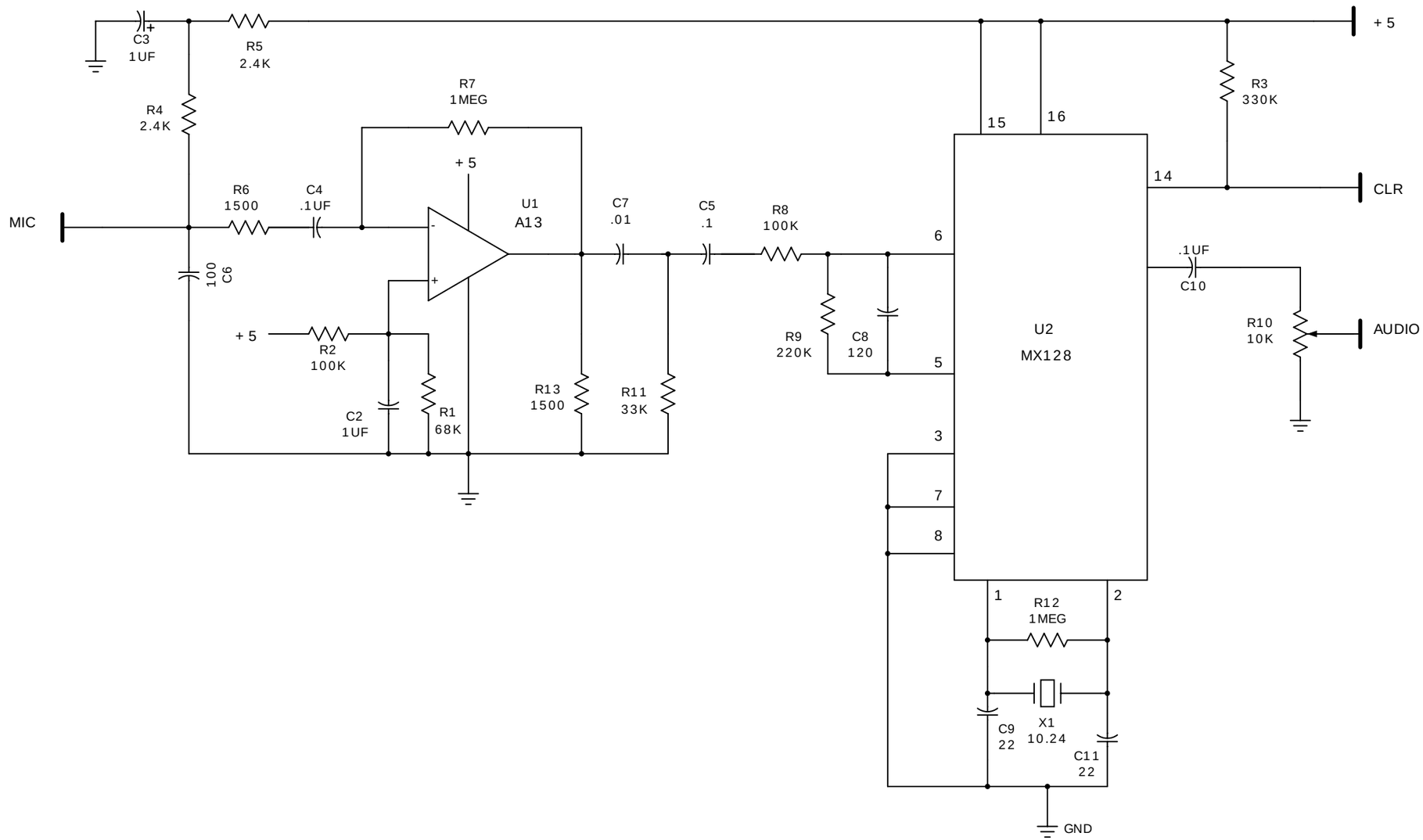

Title	CST 703- SCRAMBLER	
Size A3	Number	Rev A
Date		Drawn by
Filename 703- SCR		Sheet 2 of 2