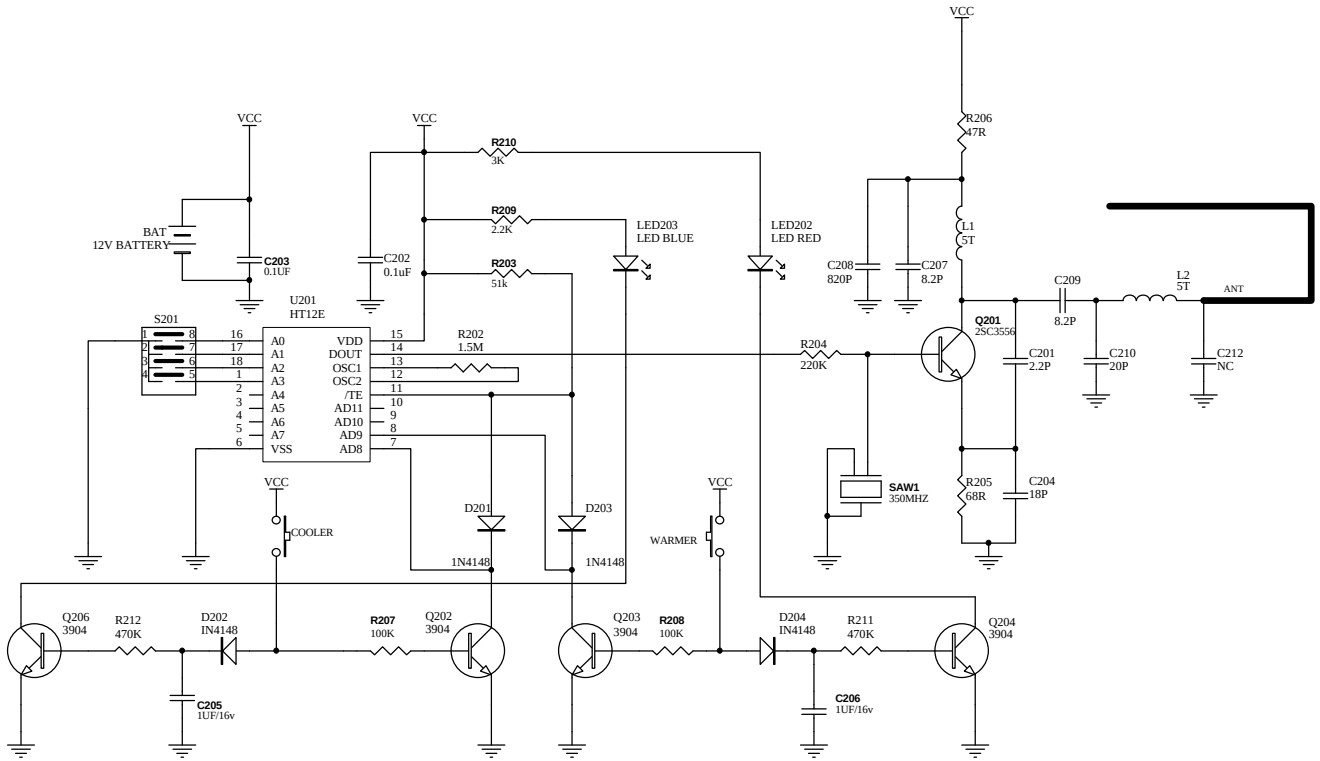

Title	HUNB86R TX		
Size B	Number		Revision 01
Date: 30-Mar-2006		Sheet of 1 of 1	
File: F:\b86r\Backup of B86R RF Transmitter 433.SCHDOC		Drawn By: Sunny Zhou	