REVISION RECORD		DATE:
REV1.0	FIRST RELEASE	
REV2.0		

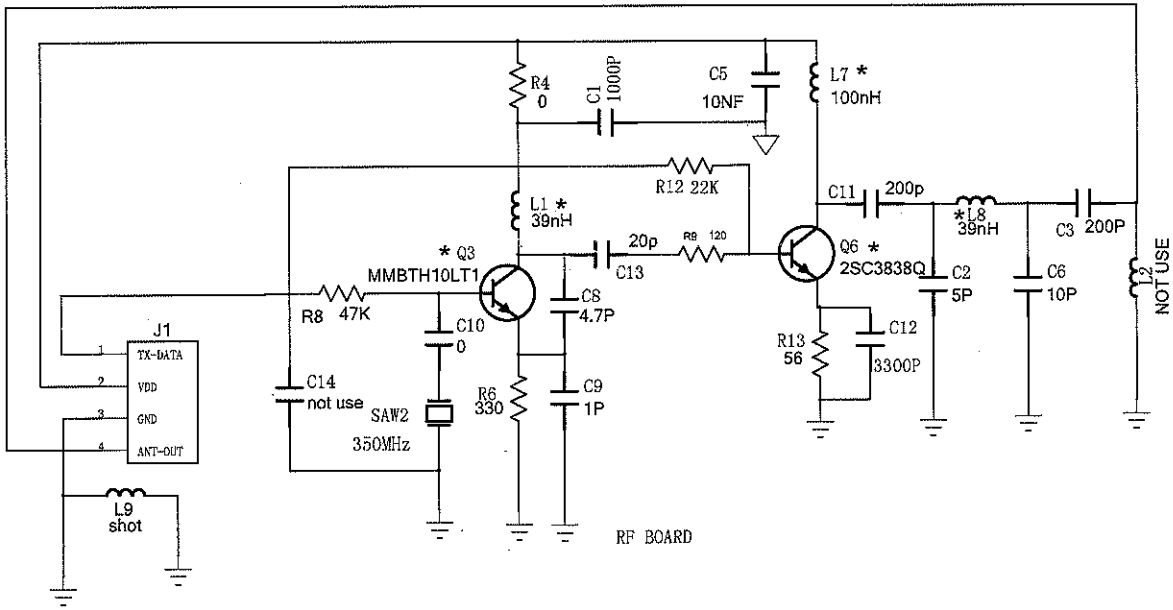

Remark:

Item	Rev2	Rev3	Rev4	Rev5
L9	100nH	shot		
C14	1000P	not use		
C10		100P	10P	0 ohm
R8			22K	47K