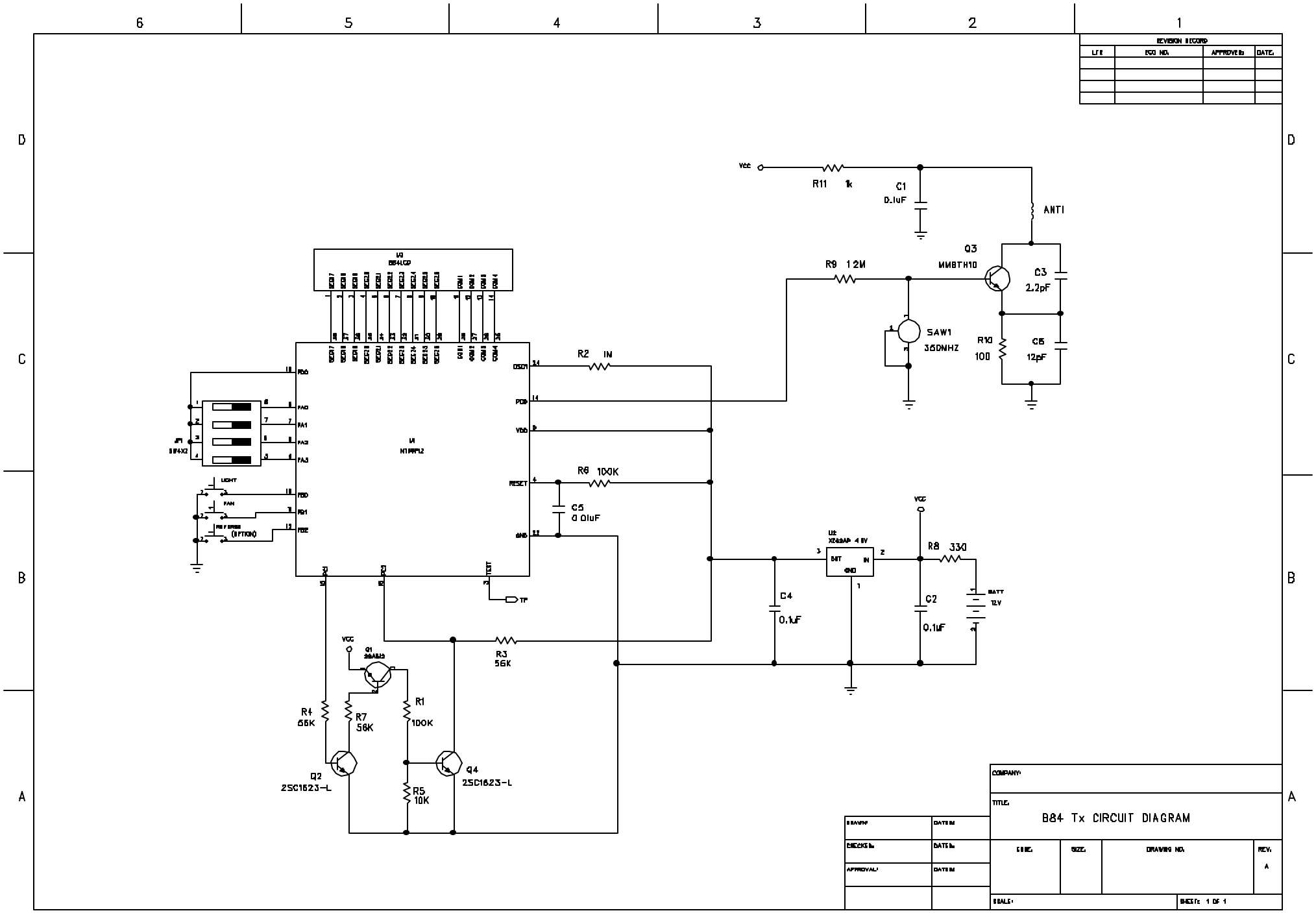
REVISION RECORD
LTR
ECO NO.
APPROVED
DATE
Vcc
R11 1k
C1 0.1uF
ANT1
Q3 MMBTH10
C3 2.2pF
R10 100
C6 12pF
R9 12M
SAW1 360MHZ
R2 1M
R6 100K
C5 0.01uF
U1 N18F12
U3 EB41C02
JP1 SW4X2
LIGHT
FAN
REVERSE (OPTION)
TP
C4 0.1uF
U2 XC6SAP 4.5V
R8 330
C2 0.1uF
BATT 12V
R3 56K
Q1 2SA1023
R4 56K
R7 56K
R1 100K
R5 10K
Q2 2SC1623-L
Q4 2SC1623-L
COMPANY:
TITLE:
B84 Tx CIRCUIT DIAGRAM
DRAWN:
DATE:
CHECKED:
DATE:
APPROVAL:
DATE:
CODE:
SIZE:
DRAWING NO.
REV.
A
SCALE:
SHEET: 1 OF 1