1.sch-1 - Thu Mar 24 11:35:22 2005

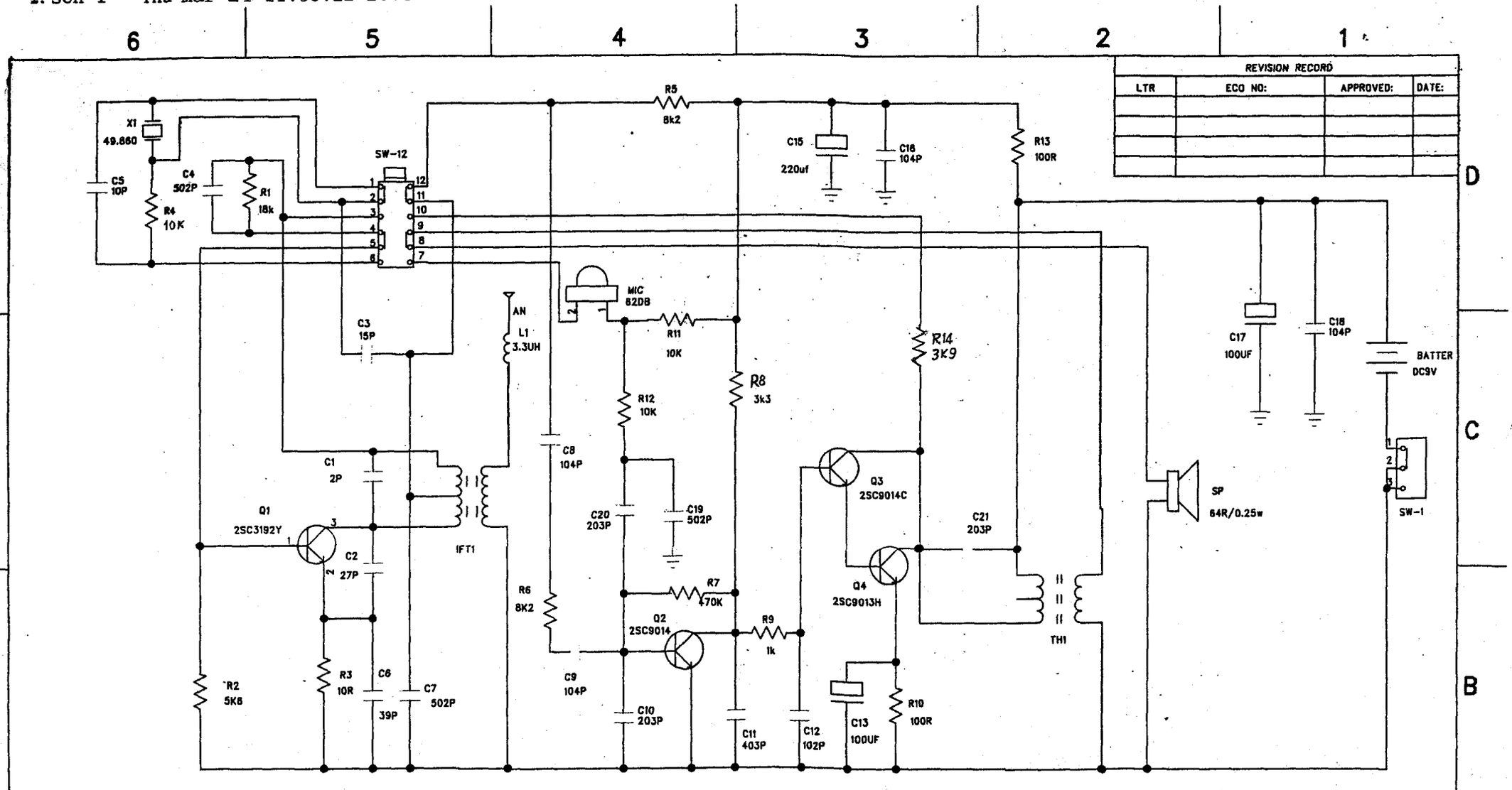

REVISION RECORD			
LTR	ECO NO:	APPROVED:	DATE:

DRAWN:	DATED:
CHECKED:	DATED:
QUALITY CONTROL:	DATED:
RELEASED:	DATED:

COMPANY:

TITLE: 22270 49.860(RX/TX)

CODE:	SIZE:	DRAWING NO:	REV:

SCALE: SHEET: OF