HONEYWELL PART NUMBER	REV	O.S. NUMBER	DESCRIPTION (REF.)	LOGO
Ⓒ 50047512-001	B	50052669-001	Antenna	HONEYWELL
ⒸⒷ 50047512-002	C	50052669-002	Antenna	AUBE

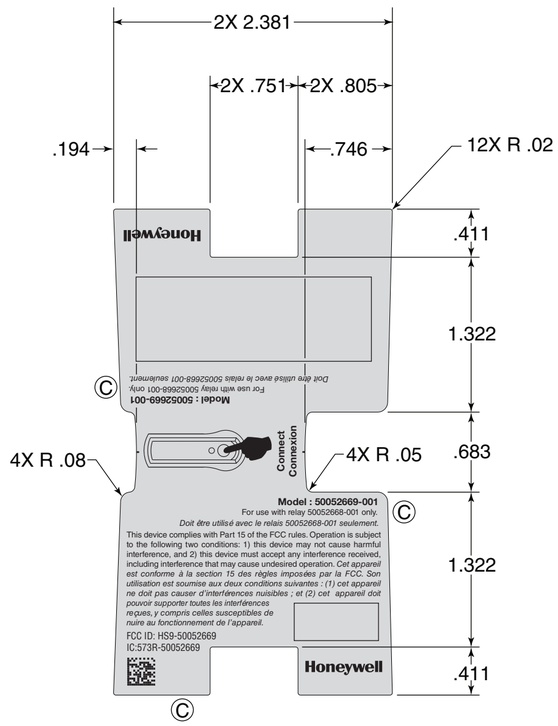

50047512-001

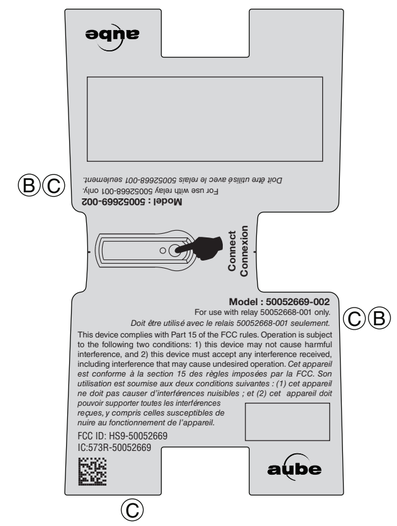

50047512-002

1. MATERIAL: 2 MIL WHITE POLYESTER WITH INDUSTRIAL GRADE EMULSION ACRYLIC CLEAR PERMANENT ADHESIVE BACKING AND CLEAR POLYESTER FILM OVERLAY.
2. MUST BE A U.L. RECOGNIZED COMPONENT LABEL, PER U.L. MARKING AND LABELING SYSTEM PGDQ2, FOR APPLICATION ON POLYCARBONATE SURFACES, AT A TEMPERATURE RANGE OF -35°C TO +65°C, PER M.S. 4629.
3. PRINTING TO BE BLACK (PMS PROCESS BLACK).
4. BACKGROUND TO BE GRAY (PMS COOL GRAY 3C).
5. LABELS TO BE SUPPLIED ON CONTINUOUS RELEASE LINER IN ROLL FORM, CORE SIZE 3.0" I.D., MAXIMUM O.D. 8.0". LABEL UNWIND 2 (BOTTOM OFF FIRST, LABELS WOUND OUTSIDE).
6. PRINT HONEYWELL PART NUMBER (SEE TAB) INSIDE CORE.
7. ECC-200 DATA MATRIX, ENCODING HONEYWELL O.S. NUMBER (SEE TAB).
8. REF: FCC ID AND IC SUFFIX GENERATED BY REPLACING THE LAST FOUR DIGITS OF O.S. NUMBER WITH A 2 DIGIT NUMBER THAT ADVANCES BY 1 FOR EACH NEW FILING FOR THAT OS SERIES. (MULTIPLE VERSIONS OF THE SAME PRODUCT MAY BE UNDER THE SAME FILING AND HAVE THE SAME FCC ID AND IC NUMBER).

REV.	DATE	E.O.	REV.	DATE	E.O.
C					
B	5-31-11	0077930			
A	4-11-11	0072789			

DIMENSIONS & TOLERANCES PER ANSI Y14.5M-1994 & ECC ENGINEERING STANDARDS

MAT'L. PURCHASED-SEE AML ( ) MAT'L. SPEC.
OR ( )

FUNCTIONAL DIMENSIONING:
ALL DIMENSIONED AND UNDIMENSIONED GEOMETRY AND TOLERANCING ON THIS DRAWING IS DEFINED AND CONTROLLED BY THE DATABASE FILE. KEY INFORMATION IS REPRESENTED BY THIS DRAWING CONTAINING FUNCTIONAL DIMENSIONS.
CONTROLLED BY DATABASE FILE:

FIRST USED ON (SEE TAB)
DIMENSIONS ARE IN: ■ INCHES ☐ MILLIMETERS
THIRD ANGLE PROJECTION
DRAFT CALLOUTS: INDICATES DECREASING DIMENSION; INDICATES INCREASING DIMENSION
–TOLERANCE UNLESS NOTED–
MACHINED S ±5° FORMED S +2° -1°

MILLIMETERS				INCHES	
OVER		INCLUDING			
0	TO	6	± 0.1	.0	± .02
6	TO	30	± 0.2	.00	± .01
30	TO	100	± 0.3	.000	± .010
100	TO	300	± 0.5		
300	TO	1000	± 0.8		

DWN. PJB 4-11-11
DES. E. TREMBLAY
NEXT ASS'Y
REFERENCE
DEV. NO. 704665
HONEYWELL CONFIDENTIAL AND PROPRIETARY
SIZE C

Honeywell
ENVIRONMENTAL & COMBUSTION CONTROLS
GOLDEN VALLEY, MN
NAME LABEL
DRAWING NO. 50047512 REV. C
SCALE 1:1 SHT 1 OF 1

DOC. FORMAT 1-11
ILLUSTRATOR
ARCHIVEREF.NO. 50047512_B.ai (MAC)