FCC Certification Test Report

Report No.: FC151221C01

Test Model: QTAFN5

FCC ID: HFS-QTAFN5

Received Date: Dec. 21, 2015

Test Date: Feb. 19, 2016 ~ Feb. 20, 2016

Issued Date: Feb. 24, 2016

Applicant: Quanta Computer Inc.

Address: No. 188, Wen Hwa 2nd RD., Guishan District, Taoyuan City, Taiwan

Issued By: Bureau Veritas Consumer Products Services (H.K.) Ltd., Taoyuan Branch

Lab Address: No. 19, Hwa Ya 2nd Rd, Wen Hwa Tsuen, Kwei Shan Hsiang, Taoyuan Hsien 333, Taiwan, R.O.C.

This report is for your exclusive use. Any copying or replication of this report to or for any other person or entity, or use of our name or trademark, is permitted only with our prior written permission. This report sets forth our findings solely with respect to the test samples identified herein. The results set forth in this report are not indicative or representative of the quality or characteristics of the lot from which a test sample was taken or any similar or identical product unless specifically and expressly noted. Our report includes all of the tests requested by you and the results thereof based upon the information that you provided to us. You have 60 days from date of issuance of this report to notify us of any material error or omission caused by our negligence, provided, however, that such notice shall be in writing and shall specifically address the issue you wish to raise. A failure to raise such issue within the prescribed time shall constitute your unqualified acceptance of the completeness of this report, the tests conducted and the correctness of the report contents. Unless specific mention, the uncertainty of measurement has been explicitly taken into account to declare the compliance or non-compliance to the specification.
The report must not be used by the client to claim product certification, approval, or endorsement by NVLAP, NIST, or any agency of the federal government.
The report must not be used by the client to claim product certification, approval, or endorsement by TAF or any government agencies.

Table of Contents

Release Control Record **3**

1 Certificate of Conformity **4**

2 Summary of Test Results **5**

2.1 Measurement Uncertainty 5
2.2 Modification Record 5

3 General Information **6**

3.1 Features of EUT 6
3.2 General Description of EUT 6
3.3 Operating Modes of EUT and Determination of Worst Case Operating Mode 7
3.4 Test Program Used and Operation Descriptions 7
3.5 Primary Clock Frequencies of Internal Source 7
3.6 Miscellaneous 8

4 Configuration and Connections with EUT **9**

4.1 Connection Diagram of EUT and Peripheral Devices 9
4.2 Configuration of Peripheral Devices and Cable Connections 9

5 Conducted Emissions at Mains Ports **10**

5.1 Limits 10
5.2 Test Instruments 10
5.3 Test Arrangement 11
5.4 Test Results 12

6 Radiated Emissions up to 1 GHz **14**

6.1 Limits 14
6.2 Test Instruments 15
6.3 Test Arrangement 16
6.4 Test Results 17

7 Radiated Emissions above 1 GHz **19**

7.1 Limits 19
7.2 Test Instruments 20
7.3 Test Arrangement 21
7.4 Test Results 22

8 Pictures of Test Arrangements **26**

Appendix – Information on the Testing Laboratories **27**

Release Control Record

Issue No.	Description	Date Issued
FC151221C01	Original Release	Feb. 24, 2016

1 Certificate of Conformity

Product: FN5

Test Model: QTAFN5

Sample Status: Identical Prototype

Applicant: Quanta Computer Inc.

Test Date: Feb. 19, 2016 ~ Feb. 20, 2016

Standards: 47 CFR FCC Part 15, Subpart B, Class B
ICES-003:2012 Issue 5, Class B
ANSI C63.4:2009

The above equipment has been tested by **Bureau Veritas Consumer Products Services (H.K.) Ltd., Taoyuan Branch**, and found compliance with the requirement of the above standards. The test record, data evaluation & Equipment Under Test (EUT) configurations represented herein are true and accurate accounts of the measurements of the sample's EMC characteristics under the conditions specified in this report.

Prepared by : Vera Huang , **Date:** Feb. 24, 2016
Vera Huang / Specialist

Approved by : Carl Chen , **Date:** Feb. 24, 2016
Carl Chen / Project Engineer

2 Summary of Test Results

47 CFR FCC Part 15, Subpart B / ICES-003:2012 Issue 5, Class B ANSI C63.4:2009				
FCC Clause	ICES-003 Clause	Test Item	Result/Remarks	Verdict
15.107	6.1	AC Power Line Conducted Emissions	Minimum passing Class B margin is -13.24 dB at 0.38600 MHz	Pass
15.109	6.2.1	Radiated Emissions up to 1 GHz	Minimum passing Class B margin is -4.35 dB at 37.52 MHz	Pass
	6.2.2	Radiated Emissions above 1 GHz	Minimum passing Class B margin is -19.74 dB at 24332.51 MHz	Pass

Note: There is no deviation to the applied test methods and requirements covered by the scope of this report.

2.1 Measurement Uncertainty

Where relevant, the following measurement uncertainty levels have been estimated for tests performed on the EUT:

The listed uncertainties are the worst case uncertainty for the entire range of measurement. Please note that the uncertainty values are provided for informational purposes only and are not used in determining the PASS/FAIL results.

Measurement	Frequency	Expended Uncertainty (k=2) (±)
Conducted Emissions at mains ports	150kHz ~ 30MHz	2.44 dB
Radiated Emissions up to 1 GHz	30MHz ~ 1GHz	4.70 dB
Radiated Emissions above 1 GHz	Above 1GHz	2.26 dB

2.2 Modification Record

There were no modifications required for compliance.

3 General Information

3.1 Features of EUT

The tests reported herein were performed according to the method specified by Quanta Computer Inc., for detailed feature description, please refer to the manufacturer's specifications or user's manual.

3.2 General Description of EUT

Product	FN5
Test Model	QTAFN5
Operating Software	Android 5.1.1
Power Supply Rating	3.8Vdc (Battery) 5Vdc or 12Vdc (Adapter)
Accessory Device	Refer to Note as below
Data Cable Supplied	N/A

Note:

1. The EUT contains following accessory devices.

Product	Brand	Model	Description
Adapter	Chicony	W15-018N2A	I/P: 100-240Vac, 50-60Hz, 0.6A O/P: 5Vdc, 3A or 12Vdc, 1.5A 1.8m shielded cable w/o core
Battery	McNair	MLP446164	3.8Vdc, 2650mAh
LTE Chip	INTEL	PMB 5746	--
WLAN Chip	INTEL	WCS8170	--

3.3 Operating Modes of EUT and Determination of Worst Case Operating Mode

Test modes are presented in the report as below.

Mode	Test Condition
	Conducted Emission & Radiated Emission
1	GSM850 Idle + BT Idle + WLAN (2.4G) Idle + GPS & GLONASS Rx + Earphone + Adapter
2	WCDMA 1900 Idle + BT Idle + WLAN (5G) Idle + Camera + Earphone + Adapter
3	LTE Band 13 Idle + BT Idle + WLAN (2.4G) Idle + MPEG 4 + USB Cable + Earphone + USB Link + Laptop

Remark:
1. For conducted emission test, test mode 3 was the worst case and only this mode was presented in the report.
2. For radiated emission test, test mode 3 was the worst case and only this mode was presented in the report.

3.4 Test Program Used and Operation Descriptions

a. The SD card was inserted into the EUT.
b. The EUT linked with Notebook via USB cable.
c. The EUT linked with bluetooth earphone in idle mode.
d. The EUT played MPEG4.
e. The EUT was connected with earphone.
f. The EUT sent H-Patterns to Printer, and Printer printed them out.
g. The EUT communicated data with Radio Communication Analyzer and Wireless AP, which acted as communication partners.
h. Set WWAN and WLAN function in idle mode.

3.5 Primary Clock Frequencies of Internal Source

The highest frequency generated or used within the EUT or on which the EUT operates or tunes is 5 GHz, provided by Quanta Computer Inc., for detailed internal source, please refer to the manufacturer's specifications.

3.6 Miscellaneous

Labelling Requirements for Part 15 Devices:

- Verification

The specific labelling requirements for a device subject to the Verification procedure are contained in Section 15.19(a). These labelling requirements are:

If the device is subject only to Verification, include a label bearing a unique identifier (Section 2.954) and one of three compliance statements specified in Section 15.19(a). If the labeling area for the device is so small, and/or it is not practical to place the compliance statement on the device, then the statement can be placed in the user manual or product packaging (Section 15.19(a)(5)). However, the device must still be labelled with the unique identifier (Verification). Generally, devices smaller than the palm of the hand are considered too small for the compliance statement.

- Certification

If the device is subject to Certification: (1) Section 2.925 contains information on identification of the equipment; (2) include a label bearing an FCC Identifier (FCC ID) (Section 2.926) and (3) include the appropriate compliance statement in Section 15.19(a). If the device is considered too small and therefore it is impractical (smaller than the palm of the hand) to display the compliance statement, then the statement may be placed in the user manual or product packaging. However, the device must still be labelled with the FCC ID. If the device is unquestionably too small for the FCC ID to be readable (smaller than 4-6 points), the FCC ID may be placed in the user manual. However, it must be determined that the device itself is too small – the label area allocated to the FCC ID may not be reduced because of over crowded identification of other product and regulatory information.

An electronic display of the FCC ID (see 9. Electronic Labelling below) may be used for Certification of Section 15.212 modular transmitters and software defined radios (Section 2.944).

- Declaration of Conformity (DoC):

The labelling requirements for a device subject to the DoC procedure are specified in Section 15.19(b). The label should include the FCC logo along with the Trade Name and Model Number, which satisfies the unique identifier requirement of Section 2.1074 if it represents the identical equipment tested for DoC compliance. For personal computers assembled from authorized components, the following additional text must also be included: “Assembled from tested components,” “Complete system not tested.” When the device is so small and/or when it is not practical to place the required additional text on the device, the text may be placed in the user manual or pamphlet supplied to the user. However, the FCC logo, Trade Name, and Model Number must still be displayed on the device (Section 15.19(b)(3)).

Part 15 Declaration of Conformity (DoC) Label Examples

Equipment certified as software defined radio may use a means that readily displays the FCC ID on an electronic display screen, instead of labelling the device (Section 2.925 (e)).

Further information may refer to FCC KDB:784748 D01 Labelling Part 15 &18 Guidelines

Labelling Requirements for ICES-003 Devices:

- Industry Canada ICES-003 Compliance Label:

CAN ICES-3 (*)/NMB-3(*)

* Insert either “A” or “B” but not both to identify the applicable Class of ITE.

4 Configuration and Connections with EUT

4.1 Connection Diagram of EUT and Peripheral Devices

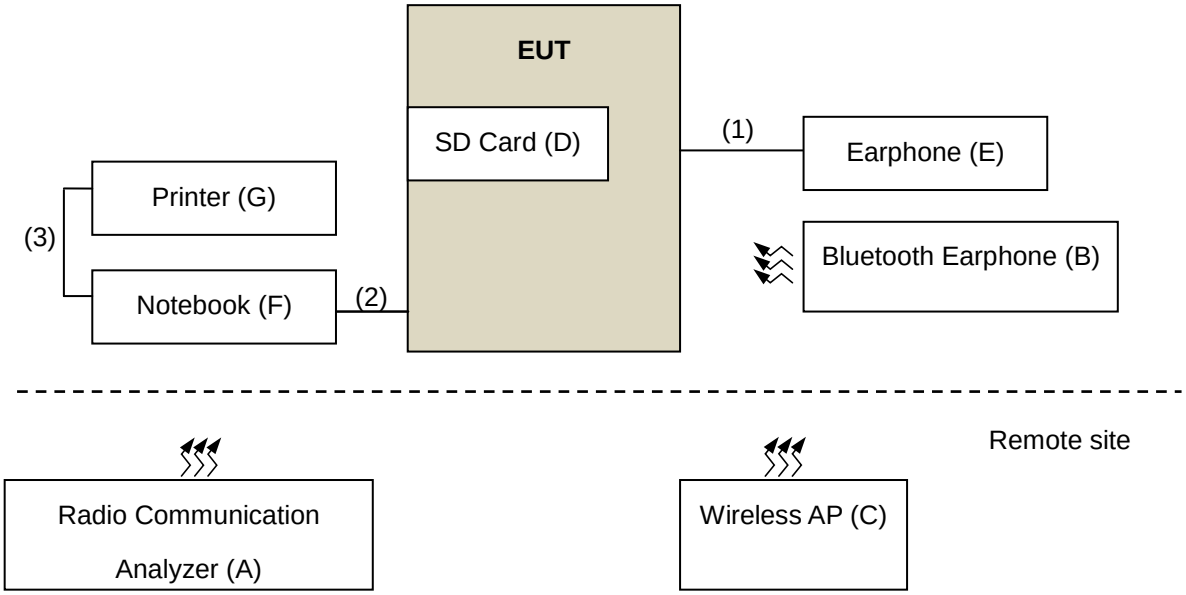

4.2 Configuration of Peripheral Devices and Cable Connections

ID	Product	Brand	Model No.	Serial No.	FCC ID	Remarks
A.	Radio Communication Analyzer	Anritsu	MT8820C	6201240432	N/A	--
B.	Bluetooth Earphone	ELECOM	LBT-MPHS400	N/A	N/A	--
C.	Wireless N Dual band Router	D-LINK	DIR-815	PVK21B5000399	KA21R815A1	--
D.	SD Card	Transced	8G	N/A	N/A	--
E.	Earphone	ASUS	N/A	N/A	N/A	--
F.	Notebook	DELL	V3560D	HGZ5RX1	N/A	--
G.	USB PRINTER	EPSON	T22	MEEZ070388	N/A	

Note:
1. All power cords of the above support units are non-shielded (1.8m).
2. Items A-D acted as communication partners to transfer data.

ID	Descriptions	Qty.	Length (m)	Shielding (Yes/No)	Cores (Qty.)	Remarks
1.	Earphone Cable	1	1.2	N	0	--
2.	USB Cable	1	1.0	Y	0	Provided by client
3.	USB Cable	1	1.8	Y	0	--

Note: The core(s) is (are) originally attached to the cable(s).

5 Conducted Emissions at Mains Ports

5.1 Limits

Frequency (MHz)	Class A (dBuV)		Class B (dBuV)	
	Quasi-peak	Average	Quasi-peak	Average
0.15 - 0.5	79	66	66 - 56	56 - 46
0.50 - 5.0	73	60	56	46
5.0 - 30.0	73	60	60	50

Notes: 1. The lower limit shall apply at the transition frequencies.
2. The limit decreases linearly with the logarithm of the frequency in the range of 0.15 to 0.50 MHz.

5.2 Test Instruments

DESCRIPTION & MANUFACTURER	MODEL NO.	SERIAL NO.	DATE OF CALIBRATION	DUE DATE OF CALIBRATION
Test Receiver ROHDE & SCHWARZ	ESCI	100613	Nov. 16, 2015	Nov. 15, 2016
RF signal cable (with 10dB PAD) Woken	5D-FB	Cable-cond1-01	Dec. 26, 2015	Dec. 25, 2016
LISN ROHDE & SCHWARZ (EUT)	ESH3-Z5	835239/001	Feb. 26, 2015	Feb. 25, 2016
LISN ROHDE & SCHWARZ (Peripheral)	ESH3-Z5	100311	Jul. 24, 2015	Jul. 23, 2016
Software ADT	BV ADT_Cond_ V7.3.7.3	NA	NA	NA

Note: 1. The calibration interval of the above test instruments is 12 months and the calibrations are traceable to NML/ROC and NIST/USA.
2. The test was performed in HwaYa Shielded Room 1.
3. The VCCI Site Registration No. is C-2040.

5.3 Test Arrangement

a. The EUT was placed 0.4 meters from the conducting wall of the shielded room with EUT being connected to the power mains through a line impedance stabilization network (LISN). Other support units were connected to the power mains through another LISN. The two LISNs provide 50 Ohm/ 50uH of coupling impedance for the measuring instrument.

b. Both lines of the power mains connected to the EUT were checked for maximum conducted interference.

c. The tset results of conducted emissions at mains ports are recorded of six worst margins for quasi-peak (mandatory) [and average (if necessary)] values against the limits at frequencies of interest unless the margin is 20 dB or greater.

Note: The resolution bandwidth and video bandwidth of test receiver is 9kHz for quasi-peak detection (QP) and average detection (AV) at frequency 0.15MHz-30MHz.

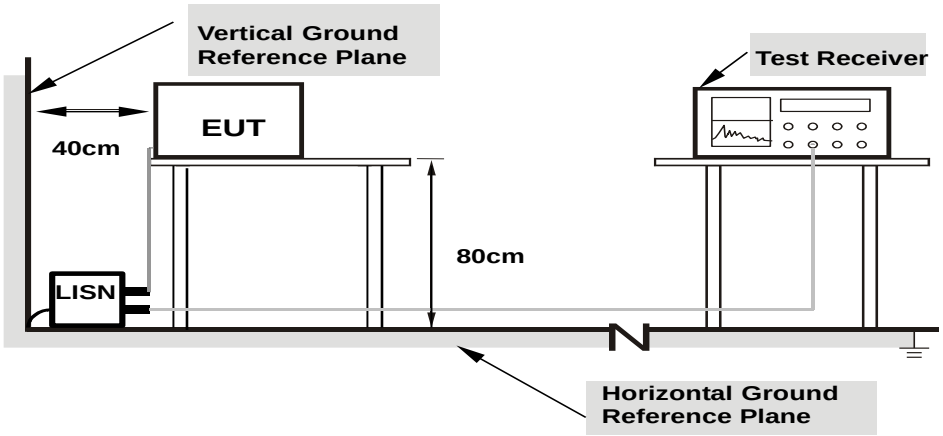

Note: 1.Support units were connected to second LISN.
2.Both of LISNs (AMN) are 80 cm from EUT and at least 80 cm from other units and other metal planes

5.4 Test Results

Frequency Range	150kHz ~ 30MHz	Detector Function & Resolution Bandwidth	Quasi-Peak (QP) / Average (AV), 9kHz
Input Power	120Vac, 60Hz	Environmental Conditions	22℃, 62%RH
Tested by	Daniel Lin	Test Date	2016/02/19
Test Mode	Mode 3		

Phase Of Power : Line (L)										
No	Frequency (MHz)	Correction Factor (dB)	Reading Value (dBuV)		Emission Level (dBuV)		Limit (dBuV)		Margin (dB)	
			Q.P.	AV.	Q.P.	AV.	Q.P.	AV.	Q.P.	AV.
1	0.16200	10.00	34.02	11.55	44.02	21.55	65.36	55.36	-21.34	-33.81
2	0.20600	10.01	39.64	26.59	49.65	36.60	63.37	53.37	-13.71	-16.76
3	0.39000	10.10	32.91	20.25	43.01	30.35	58.06	48.06	-15.06	-17.72
4	0.46600	10.11	32.09	19.22	42.20	29.33	56.58	46.58	-14.39	-17.26
5	3.83000	10.38	31.36	21.01	41.74	31.39	56.00	46.00	-14.26	-14.61
6	13.17800	10.79	28.94	22.65	39.73	33.44	60.00	50.00	-20.27	-16.56

Remarks:

1. Q.P. and AV. are abbreviations of quasi-peak and average individually.
2. The emission levels of other frequencies were very low against the limit.
3. Margin value = Emission level – Limit value
4. Correction factor = Insertion loss + Cable loss
5. Emission Level = Correction Factor + Reading Value

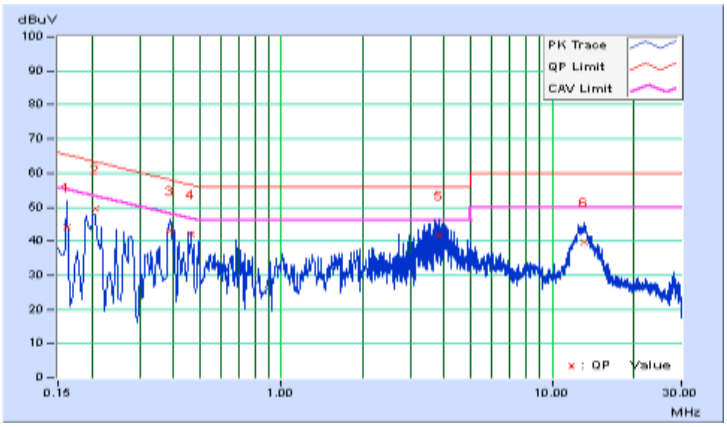

Frequency Range	150kHz ~ 30MHz	Detector Function & Resolution Bandwidth	Quasi-Peak (QP) / Average (AV), 9kHz
Input Power	120Vac, 60Hz	Environmental Conditions	22℃, 62%RH
Tested by	Daniel Lin	Test Date	2016/02/19
Test Mode	Mode 3		

Phase Of Power : Neutral (N)										
No	Frequency (MHz)	Correction Factor (dB)	Reading Value (dBuV)		Emission Level (dBuV)		Limit (dBuV)		Margin (dB)	
			Q.P.	AV.	Q.P.	AV.	Q.P.	AV.	Q.P.	AV.
1	0.16200	9.97	34.06	10.54	44.03	20.51	65.36	55.36	-21.33	-34.85
2	0.17801	9.97	32.18	10.63	42.15	20.60	64.58	54.58	-22.42	-33.97
3	0.20600	9.98	37.53	25.57	47.51	35.55	63.37	53.37	-15.85	-17.81
4	**0.38600**	**10.06**	**34.85**	**19.92**	**44.91**	**29.98**	**58.15**	**48.15**	**-13.24**	**-18.17**
5	3.75800	10.31	31.16	20.18	41.47	30.49	56.00	46.00	-14.53	-15.51
6	12.80200	10.63	31.64	25.35	42.27	35.98	60.00	50.00	-17.73	-14.02

Remarks:

1. Q.P. and AV. are abbreviations of quasi-peak and average individually.
2. The emission levels of other frequencies were very low against the limit.
3. Margin value = Emission level – Limit value
4. Correction factor = Insertion loss + Cable loss
5. Emission Level = Correction Factor + Reading Value

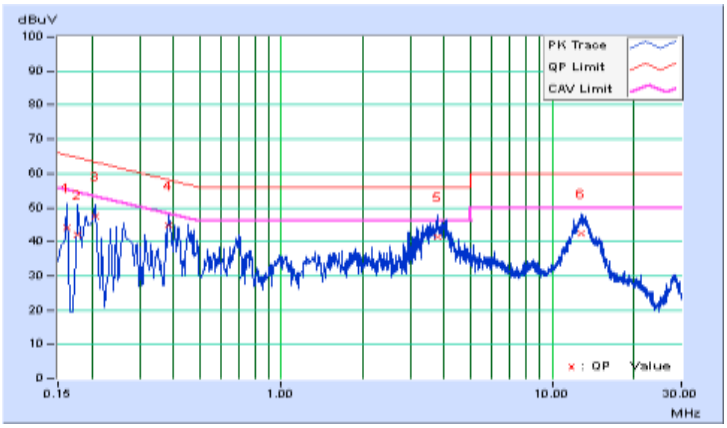

6 Radiated Emissions up to 1 GHz

6.1 Limits

Emissions radiated outside of the specified bands, shall be according to the general radiated limits as following:

Radiated Emissions Limits at 10 meters (dBμV/m)				
Frequencies (MHz)	FCC 15B / ICES-003, Class A	FCC 15B / ICES-003, Class B	CISPR 22, Class A	CISPR 22, Class B
30-88	39	29.5	40	30
88-216	43.5	33.1		
216-230	46.4	35.6		
230-960			47	37
960-1000	49.5	43.5		

Radiated Emissions Limits at 3 meters (dBμV/m)				
Frequencies (MHz)	FCC 15B / ICES-003, Class A	FCC 15B / ICES-003, Class B	CISPR 22, Class A	CISPR 22, Class B
30-88	49.5	40	50.5	40.5
88-216	54	43.5		
216-230	56.9	46		
230-960			57.5	47.5
960-1000	60	54		

Notes:
1. The lower limit shall apply at the transition frequencies.
2. Emission level (dBuV/m) = 20 log Emission level (uV/m).
3. QP detector shall be applied if not specified.

6.2 Test Instruments

DESCRIPTION & MANUFACTURER	MODEL NO.	SERIAL NO.	DATE OF CALIBRATION	DUE DATE OF CALIBRATION
Test Receiver ROHDE & SCHWARZ (V)	ESR	101240	Oct. 06, 2015	Oct. 05, 2016
Test Receiver ROHDE & SCHWARZ (H)	ESR	101264	Dec. 11, 2015	Dec. 10, 2016
BILOG Antenna SCHWARZBECK (V)	VULB9168	9168-149	Jan. 05, 2016	Jan. 04, 2017
BILOG Antenna SCHWARZBECK (H)	VULB9168	9168-154	Jan. 05, 2016	Jan. 04, 2017
Preamplifier Agilent (V)	310N	352924	Jul. 20, 2015	Jul. 19, 2016
Preamplifier Agilent (H)	310N	352923	Jul. 20, 2015	Jul. 19, 2016
RF signal cable (with 5dB PAD) Woken (V)	8D-FB	Cable-CH(V)-01	Oct. 25, 2015	Oct. 24, 2016
RF signal cable (with 5dB PAD) Woken (H)	8D-FB	Cable-CH(H)-01	Oct. 25, 2015	Oct. 24, 2016
Software BV ADT	BV ADT_Radiated_ V 8.7.07	NA	NA	NA
Antenna Tower (V)	MFA-440	9707	NA	NA
Antenna Tower (H)	MFA-440	970705	NA	NA
Turn Table	DS430	50303	NA	NA
Controller (V)	MF7802	074	NA	NA
Controller (H)	MF7802	08093	NA	NA

Note:
1. The calibration interval of the above test instruments is 12 months and the calibrations are traceable to NML/ROC and NIST/USA.
2. The test was performed in HwaYa Chamber 1.
3. The FCC Site Registration No. is 477732.
4. The IC Site Registration No. is IC 7450F-1.
5. The VCCI Site Registration No. is R-1893.

6.3 Test Arrangement

a. The EUT was placed on the top of a rotating table 0.8 meters above the ground at an accredited test facility. The table was rotated 360 degrees to determine the position of the highest radiation.
b. The EUT was set 10 meters away from the interference-receiving antenna, which was mounted on the top of a variable-height antenna tower.
c. The antenna is a broadband antenna, and its height is varied from one meter to four meters above the ground to determine the maximum value of the field strength. Both horizontal and vertical polarizations of the antenna are set to make the measurement.
d. For each suspected emission, the EUT was arranged to its worst case and then the antenna was tuned to heights from 1 meter to 4 meters and the rotatable table was turned from 0 degrees to 360 degrees to find the maximum reading.
e. The test-receiver system was set to quasi-peak detect function and specified bandwidth with maximum hold mode when the test frequency is below 1 GHz.

Note: The resolution bandwidth and video bandwidth of test receiver/spectrum analyzer is 120kHz for quasi-peak detection (QP) at frequency below 1GHz.

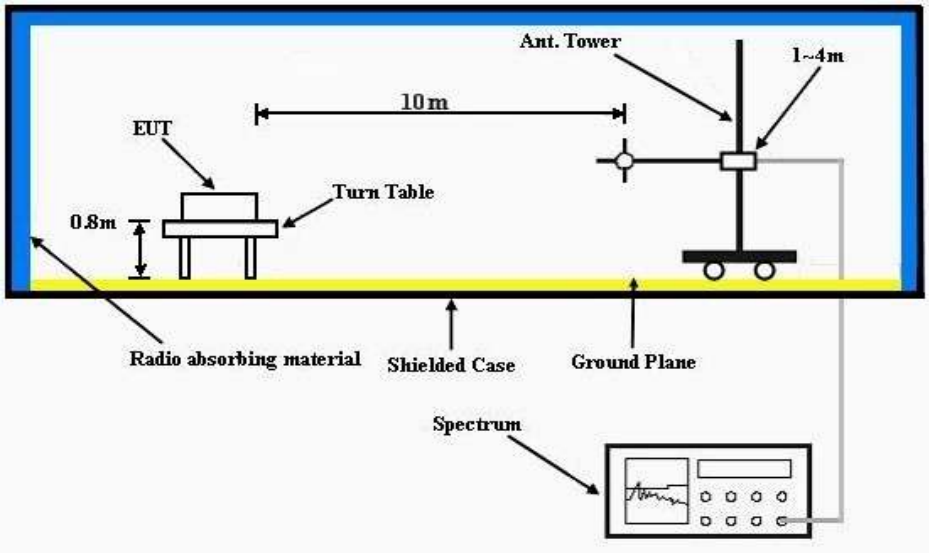

6.4 Test Results

Frequency Range	30MHz ~ 1GHz	Detector Function & Resolution Bandwidth	Quasi-Peak (QP), 120kHz
Input Power	120Vac, 60Hz	Environmental Conditions	20℃, 60%RH
Tested by	Pon Tsai	Test Date	2016/02/20
Test Mode	Mode 3		

Antenna Polarity & Test Distance : Horizontal at 10 m								
No	Frequency (MHz)	Emission Level (dBuV/m)	Limit (dBuV/m)	Margin (dB)	Antenna Height (m)	Table Angle (Degree)	Raw Value (dBuV)	Correction Factor (dB/m)
1	30.53	18.84 QP	30.00	-11.16	1.00 H	117	33.12	-14.28
2	56.09	16.52 QP	30.00	-13.48	2.50 H	214	29.23	-12.71
3	153.34	19.56 QP	30.00	-10.44	4.00 H	262	32.12	-12.56
4	763.07	28.33 QP	37.00	-8.67	1.50 H	34	28.75	-0.42
5	820.54	29.09 QP	37.00	-7.91	4.00 H	53	28.55	0.54
6	949.61	29.96 QP	37.00	-7.04	2.00 H	250	26.75	3.21

Remarks:

1. Emission Level(dBuV/m) = Raw Value(dBuV) + Correction Factor(dB/m)
2. Correction Factor(dB/m) = Antenna Factor (dB/m) + Cable Factor (dB) – Pre-Amplifier Factor (dB)
3. The other emission levels were very low against the limit.
4. Margin value = Emission level – Limit value

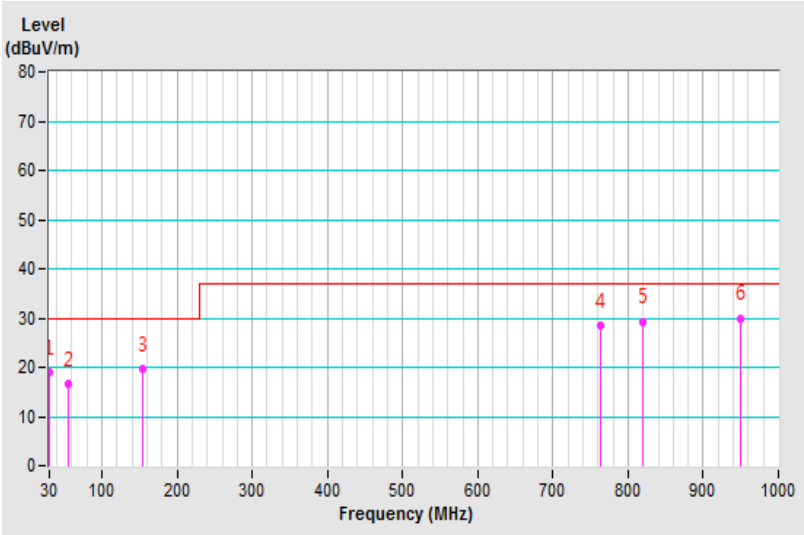

Frequency Range	30MHz ~ 1GHz	Detector Function & Resolution Bandwidth	Quasi-Peak (QP), 120kHz
Input Power	120Vac, 60Hz	Environmental Conditions	20℃, 60%RH
Tested by	Pon Tsai	Test Date	2016/02/20
Test Mode	Mode 3		

Antenna Polarity & Test Distance : Vertical at 10 m								
No	Frequency (MHz)	Emission Level (dBuV/m)	Limit (dBuV/m)	Margin (dB)	Antenna Height (m)	Table Angle (Degree)	Raw Value (dBuV)	Correction Factor (dB/m)
1	**37.52**	**25.65 QP**	**30.00**	**-4.35**	**2.50 V**	**25**	**36.73**	**-11.08**
2	167.99	24.84 QP	30.00	-5.16	2.00 V	294	35.84	-11.00
3	212.08	22.05 QP	30.00	-7.95	1.00 V	116	35.65	-13.60
4	227.07	24.75 QP	30.00	-5.25	1.00 V	71	38.25	-13.50
5	946.07	32.05 QP	37.00	-4.95	4.00 V	286	27.13	4.92
6	977.54	32.53 QP	37.00	-4.47	1.50 V	346	26.58	5.95

Remarks:

1. Emission Level(dBuV/m) = Raw Value(dBuV) + Correction Factor(dB/m)
2. Correction Factor(dB/m) = Antenna Factor (dB/m) + Cable Factor (dB) – Pre-Amplifier Factor (dB)
3. The other emission levels were very low against the limit.
4. Margin value = Emission level – Limit value

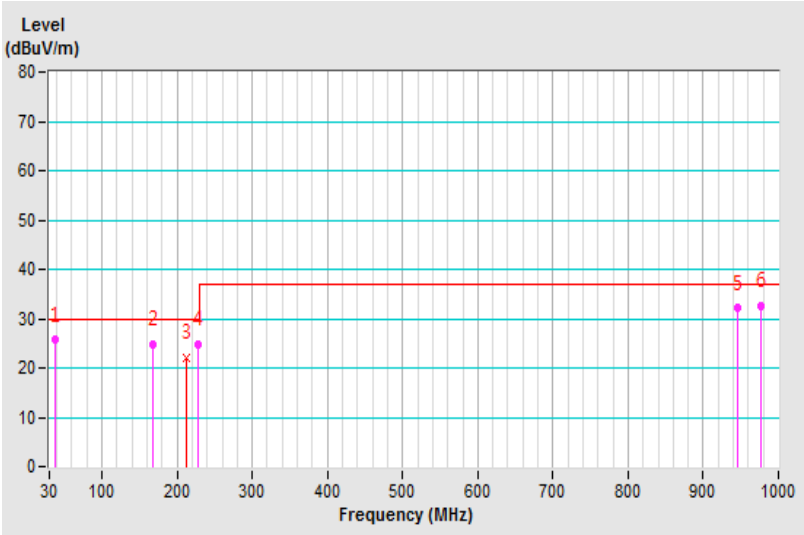

7 Radiated Emissions above 1 GHz

7.1 Limits

Emissions radiated outside of the specified bands, shall be according to the general radiated limits as following:

Radiated Emissions Limits at 10 meters (dBμV/m)				
Frequencies (MHz)	FCC 15B / ICES-003, Class A	FCC 15B / ICES-003, Class B	CISPR 22, Class A	CISPR 22, Class B
1000-3000	Avg: 49.5 Peak: 69.5	Avg: 43.5 Peak: 63.5	Not defined	Not defined
Above 3000			Not defined	Not defined

Radiated Emissions Limits at 3 meters (dBμV/m)				
Frequencies (MHz)	FCC 15B / ICES-003, Class A	FCC 15B / ICES-003, Class B	CISPR 22, Class A	CISPR 22, Class B
1000-3000	Avg: 60 Peak: 80	Avg: 54 Peak: 74	Avg: 56 Peak: 76	Avg: 50 Peak: 70
Above 3000			Avg: 60 Peak: 80	Avg: 54 Peak: 74

Notes:
1. The lower limit shall apply at the transition frequencies.
2. Emission level (dBuV/m) = 20 log Emission level (uV/m).
3. As shown in 15.35(b), for frequencies above 1000MHz, the field strength limits are based on average detector, however, the peak field strength of any emission shall not exceed the maximum permitted average limits, specified above by more than 20dB under any condition of modulation.

Radiated Emissions Limits at 1.5 meters (dBμV/m)		
Frequencies (MHz)	FCC 15B / ICES-003, Class A	FCC 15B / ICES-003, Class B
Above 18000	Avg: 66 Peak: 86	Avg: 60 Peak: 80

Note: Limit@1.5m = Limit@3m + 20log(3/1.5)

Frequency Range (For unintentional radiators)

Highest frequency generated or used in the device or on which the device operates or tunes (MHz)	Upper frequency of measurement range (MHz)
Below 1.705	30
1.705-108	1000
108-500	2000
500-1000	5000
Above 1000	5th harmonic of the highest frequency or 40GHz, whichever is lower

7.2 Test Instruments

DESCRIPTION & MANUFACTURER	MODEL NO.	SERIAL NO.	DATE OF CALIBRATION	DUE DATE OF CALIBRATION
Test Receiver ROHDE & SCHWARZ	ESCI	100424	Oct. 12, 2015	Oct. 11, 2016
Spectrum Analyzer Agilent	E4446A	MY51100039	Aug. 25, 2015	Aug. 24, 2016
RF signal cable (with 5dB PAD) Woken	8D-FB	Cable-CH2-01	Mar. 22, 2015	Mar. 21, 2016
HORN Antenna (with 4dB PAD) SCHWARZBECK	BBHA 9120 D	9120D-405	Feb. 06, 2015	Feb. 05, 2016
Preamplifier Agilent (Above 1GHz)	8449B	3008A01961	Oct. 18, 2015	Oct. 17, 2016
RF signal cable ALLTEST	JUNFLON	Cable-CH2-02 (MWX322+MWX22113028S0295)	Nov. 06, 2015	Nov. 05, 2016
Software BV ADT	BV ADT_Radiated_ V7.6.15.9.4	NA	NA	NA
Antenna Tower BV ADT	AT100	AT93021702	NA	NA
Turn Table BV ADT	TT100	TT93021702	NA	NA
Controller BV ADT	SC100	SC93021702	NA	NA
HORN Antenna (with 3dB PAD) SCHWARZBECK	BBHA 9170	148	Jan. 19, 2016	Jan. 18, 2017
RF signal cable HUBER+SUHNER	SUCOFLEX 102	Cable-CH1-03-38218	Oct. 25, 2015	Oct. 24, 2016
RF signal cable HUBER+SUHNER	SUCOFLEX 102	Cable-CH1-04-37433	Oct. 25, 2015	Oct. 24, 2016
Fix tool for Boresight antenna tower	BAF-01	2	NA	NA
Pre-amplifier (18GHz-40GHz) EMC	EMC184045B	980175	Nov. 07, 2015	Nov. 06, 2016

Note:
1. The calibration interval of the above test instruments is 12 months and the calibrations are traceable to NML/ROC and NIST/USA.
2. The test was performed in HwaYa Chamber 2.
3. The horn antenna and HP preamplifier (model: 8449B) are used only for the measurement of emission frequency above 1GHz if tested.
4. The FCC Site Registration No. is 686814.
5. The IC Site Registration No. is IC 7450F-2.
6. The VCCI Site Registration No. is G-18.

7.3 Test Arrangement

a. The EUT was placed on the top of a rotating table 0.8 meters above the ground at an accredited chamber room. The table was rotated 360 degrees to determine the position of the highest radiation.
b. The EUT was set 3 meters away from the interference-receiving antenna, which was mounted on the top of a variable-height antenna tower.
c. For frequency range 1GHz ~ 18GHz, the EUT was set 3 meters away from the interference-receiving antenna, which was mounted on the top of a variable-height antenna tower.
d. For frequency range 18GHz ~ 40GHz, the EUT was set 1.5 meters away from the interference-receiving antenna, which was mounted on the top of a variable-height antenna tower.
e. The height of antenna can be varied from one meter to four meters, the height of adjustment depends on the EUT height and the antenna 3dB beamwidth both, to detect the maximum value of the field strength. Both horizontal and vertical polarizations of the antenna are set to make the measurement.
f. For each suspected emission, the EUT was arranged to its worst case and then the antenna was tuned to heights and the rotatable table was turned from 0 degrees to 360 degrees to find the maximum reading.
g. The spectrum analyzer system was set to peak and average detect function and specified bandwidth with maximum hold mode when the test frequency is above 1 GHz.

Note: The resolution bandwidth of test receiver/spectrum analyzer is 1MHz and video bandwidth is 3MHz for Peak detection (PK) at frequency above 1GHz. The resolution bandwidth of test receiver/spectrum analyzer is 1 MHz for Average detection (AV) at frequency above 1GHz.

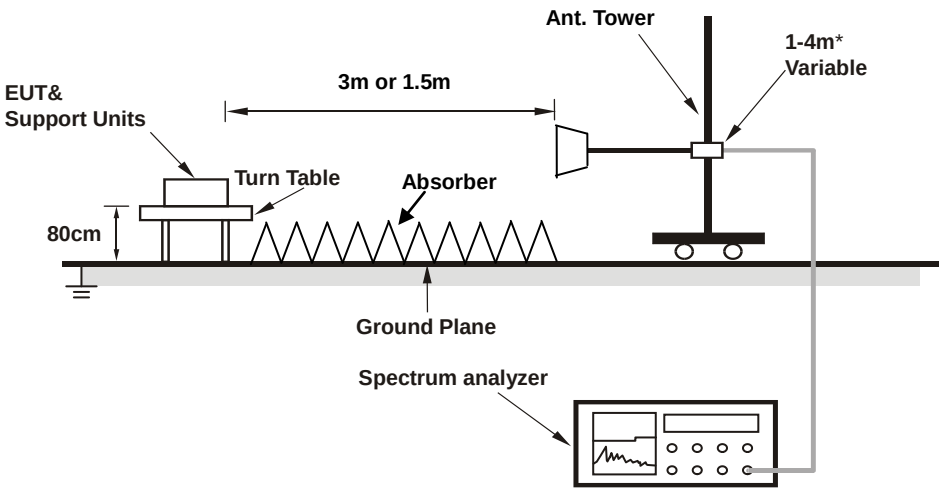

7.4 Test Results

Frequency Range	1GHz ~ 18GHz	Detector Function & Resolution Bandwidth	Peak (PK) / Average (AV), 1MHz
Input Power	120Vac, 60Hz	Environmental Conditions	21℃, 64%RH
Tested by	Scott Yang	Test Date	2016/02/20
Test Mode	Mode 3		

Antenna Polarity & Test Distance : Horizontal at 3 m								
No	Frequency (MHz)	Emission Level (dBuV/m)	Limit (dBuV/m)	Margin (dB)	Antenna Height (m)	Table Angle (Degree)	Raw Value (dBuV)	Correction Factor (dB/m)
1	1584.89	41.25 PK	74.00	-32.75	1.41 H	285	43.25	-2.00
2	1584.89	28.96 AV	54.00	-25.04	1.41 H	285	30.96	-2.00
3	2716.52	44.58 PK	74.00	-29.42	1.57 H	11	42.62	1.96
4	2716.52	29.63 AV	54.00	-24.37	1.57 H	11	27.67	1.96
5	3494.75	46.12 PK	74.00	-27.88	1.00 H	191	42.40	3.72
6	3494.75	31.06 AV	54.00	-22.94	1.00 H	191	27.34	3.72

Remarks:

1. Emission Level(dBuV/m) = Raw Value(dBuV) + Correction Factor(dB/m)
2. Correction Factor(dB/m) = Antenna Factor (dB/m) + Cable Factor (dB) – Pre-Amplifier Factor (dB)
3. The other emission levels were very low against the limit.
4. Margin value = Emission level – Limit value

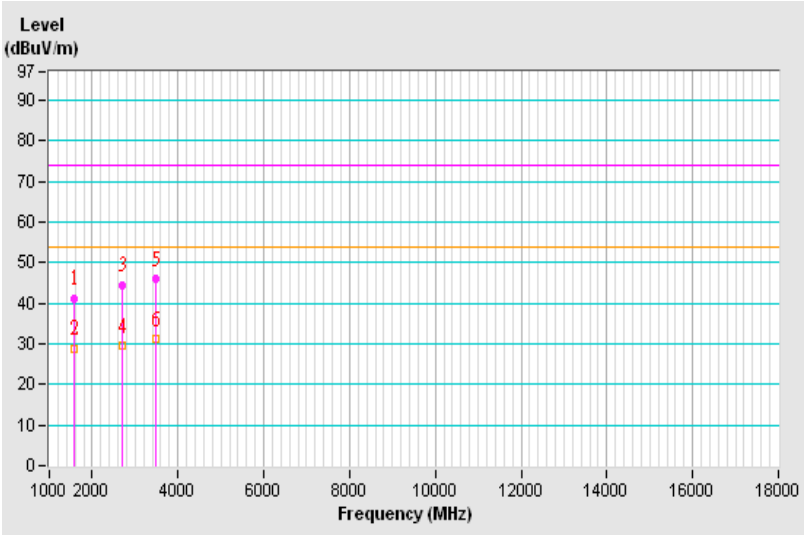

Frequency Range	1GHz ~ 18GHz	Detector Function & Resolution Bandwidth	Peak (PK) / Average (AV), 1MHz
Input Power	120Vac, 60Hz	Environmental Conditions	21℃, 64%RH
Tested by	Scott Yang	Test Date	2016/02/20
Test Mode	Mode 3		

Antenna Polarity & Test Distance : Vertical at 3 m								
No	Frequency (MHz)	Emission Level (dBuV/m)	Limit (dBuV/m)	Margin (dB)	Antenna Height (m)	Table Angle (Degree)	Raw Value (dBuV)	Correction Factor (dB/m)
1	1670.28	42.28 PK	74.00	-31.72	1.18 V	21	43.98	-1.70
2	1670.28	28.36 AV	54.00	-25.64	1.18 V	21	30.06	-1.70
3	3814.25	45.96 PK	74.00	-28.04	1.37 V	247	41.12	4.84
4	3814.25	30.02 AV	54.00	-23.98	1.37 V	247	25.18	4.84
5	4553.21	47.75 PK	74.00	-26.25	1.20 V	66	41.05	6.70
6	4553.21	30.28 AV	54.00	-23.72	1.20 V	66	23.58	6.70

Remarks:

1. Emission Level(dBuV/m) = Raw Value(dBuV) + Correction Factor(dB/m)
2. Correction Factor(dB/m) = Antenna Factor (dB/m) + Cable Factor (dB) – Pre-Amplifier Factor (dB)
3. The other emission levels were very low against the limit.
4. Margin value = Emission level – Limit value

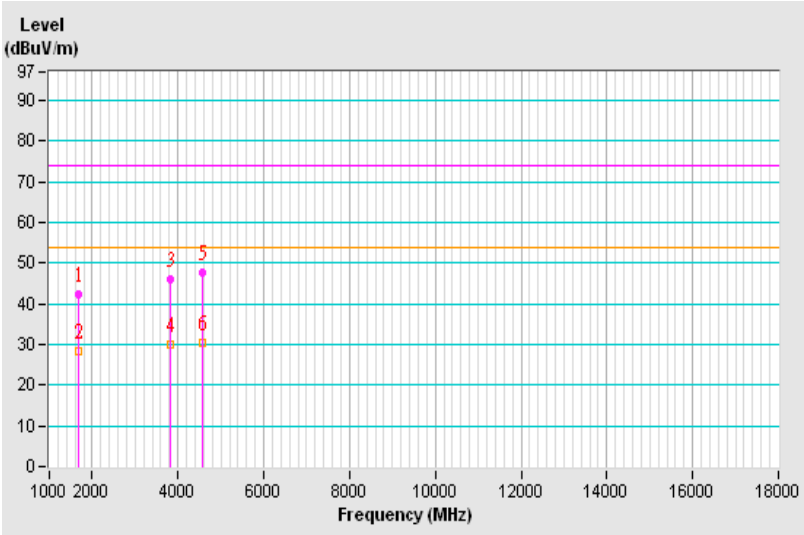

Frequency Range	18GHz ~ 40GHz	Detector Function & Resolution Bandwidth	Peak (PK) / Average (AV), 1MHz
Input Power	120Vac, 60Hz	Environmental Conditions	21℃, 64%RH
Tested by	Scott Yang	Test Date	2016/02/20
Test Mode	Mode 3		

Antenna Polarity & Test Distance : Horizontal at 3 m								
No	Frequency (MHz)	Emission Level (dBuV/m)	Limit (dBuV/m)	Margin (dB)	Antenna Height (m)	Table Angle (Degree)	Raw Value (dBuV)	Correction Factor (dB/m)
1	24332.51	53.71 PK	80.00	-26.29	1.00 H	161	52.70	1.01
2	**24332.51**	**40.26 AV**	**60.00**	**-19.74**	**1.00 H**	**161**	**39.25**	**1.01**

Remarks:

1. Emission Level(dBuV/m) = Raw Value(dBuV) + Correction Factor(dB/m)
2. Correction Factor(dB/m) = Antenna Factor (dB/m) + Cable Factor (dB) – Pre-Amplifier Factor (dB)
3. The other emission levels were very low against the limit.
4. Margin value = Emission level – Limit value

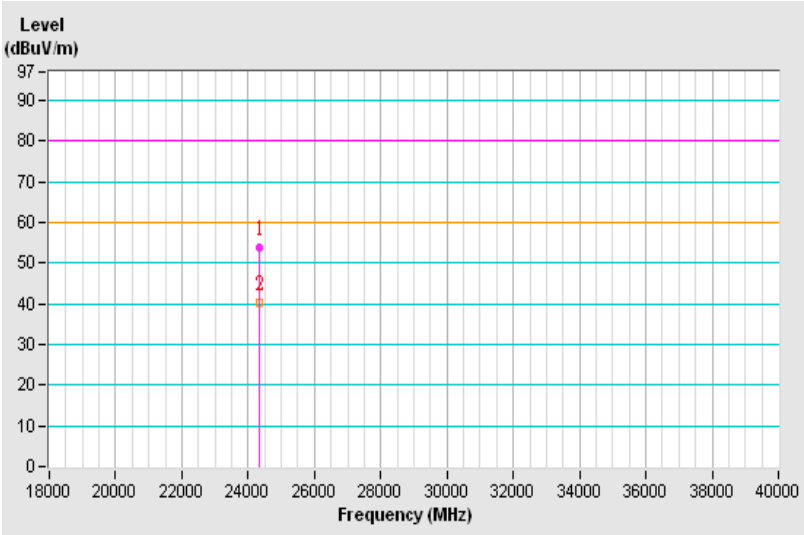

Frequency Range	18GHz ~ 40GHz	Detector Function & Resolution Bandwidth	Peak (PK) / Average (AV), 1MHz
Input Power	120Vac, 60Hz	Environmental Conditions	21℃, 64%RH
Tested by	Scott Yang	Test Date	2016/02/20
Test Mode	Mode 3		

Antenna Polarity & Test Distance : Vertical at 1.5 m								
No	Frequency (MHz)	Emission Level (dBuV/m)	Limit (dBuV/m)	Margin (dB)	Antenna Height (m)	Table Angle (Degree)	Raw Value (dBuV)	Correction Factor (dB/m)
1	24330.74	52.49 PK	80.00	-27.51	1.00 V	118	51.50	0.99
2	24330.74	40.11 AV	60.00	-19.89	1.00 V	118	39.12	0.99

Remarks:

1. Emission Level(dBuV/m) = Raw Value(dBuV) + Correction Factor(dB/m)
2. Correction Factor(dB/m) = Antenna Factor (dB/m) + Cable Factor (dB) – Pre-Amplifier Factor (dB)
3. The other emission levels were very low against the limit.
4. Margin value = Emission level – Limit value

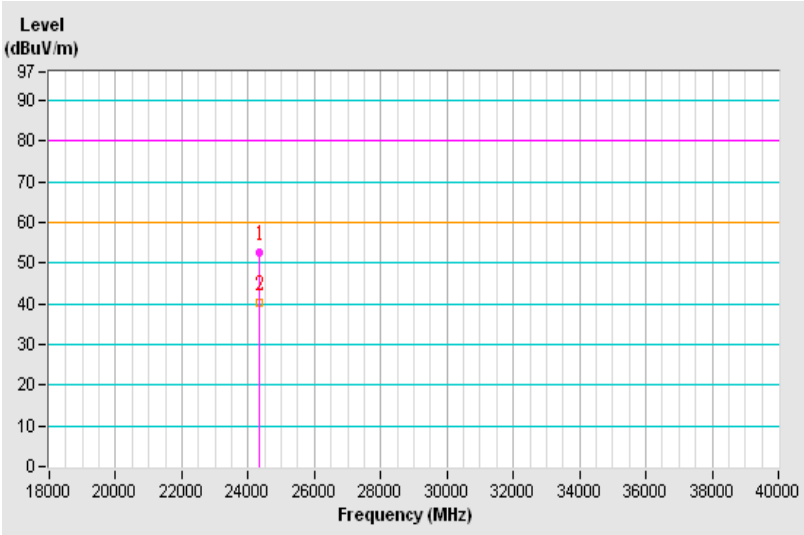

8 Pictures of Test Arrangements

Refer to the attached file (Test Setup Photo).

Appendix – Information on the Testing Laboratories

We, Bureau Veritas Consumer Products Services (H.K.) Ltd., Taoyuan Branch, were founded in 1988 to provide our best service in EMC, Radio, Telecom and Safety consultation. Our laboratories are accredited and approved according to ISO/IEC 17025.

If you have any comments, please feel free to contact us at the following:

Linko EMC/RF Lab
Tel: 886-2-26052180
Fax: 886-2-26051924

Hsin Chu EMC/RF/Telecom Lab
Tel: 886-3-6668565
Fax: 886-3-6668323

Hwa Ya EMC/RF/Safety Lab
Tel: 886-3-3183232
Fax: 886-3-3270892

Email: service.adt@tw.bureauveritas.com
Web Site: www.bureauveritas-adt.com

The address and road map of all our labs can be found in our web site also.

--- END ---