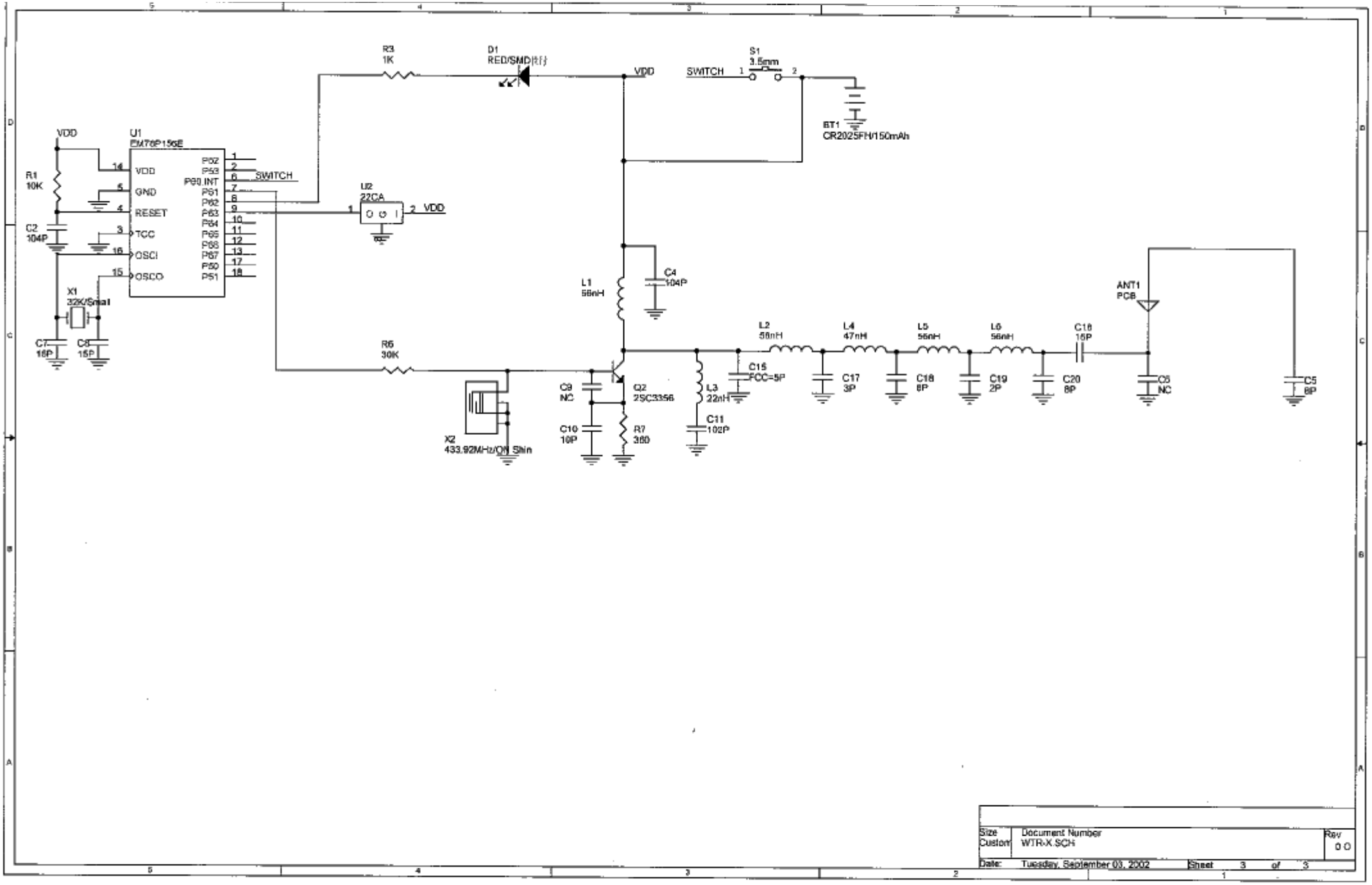
R3
1K
D1
RED/SMD
VDD
S1
3.5mm
SWITCH
BT1
CR2025FH/150mAh
U1
EM78P156E
VDD
GND
RESET
TCC
OSCI
OSCO
P60.INT
P52
P53
P61
P62
P63
P64
P65
P66
P67
P50
P51
R1
10K
C2
104P
X1
32K/Smal
C7
15P
C8
15P
U2
22CA
R6
30K
X2
433.92MHz/QK Shin
L1
56nH
C4
104P
C9
NC
C10
10P
Q2
2SC3356
R7
360
L3
22nH
C11
102P
C15
FCC=5P
L2
56nH
C17
3P
L4
47nH
C18
8P
L5
56nH
C19
2P
L6
56nH
C20
8P
C16
15P
ANT1
PCB
C6
NC
C5
8P
Size
Custom
Document Number
WTR-X.SCH
Rev
0.0
Date:
Tuesday, September 03, 2002
Sheet
3
of
3