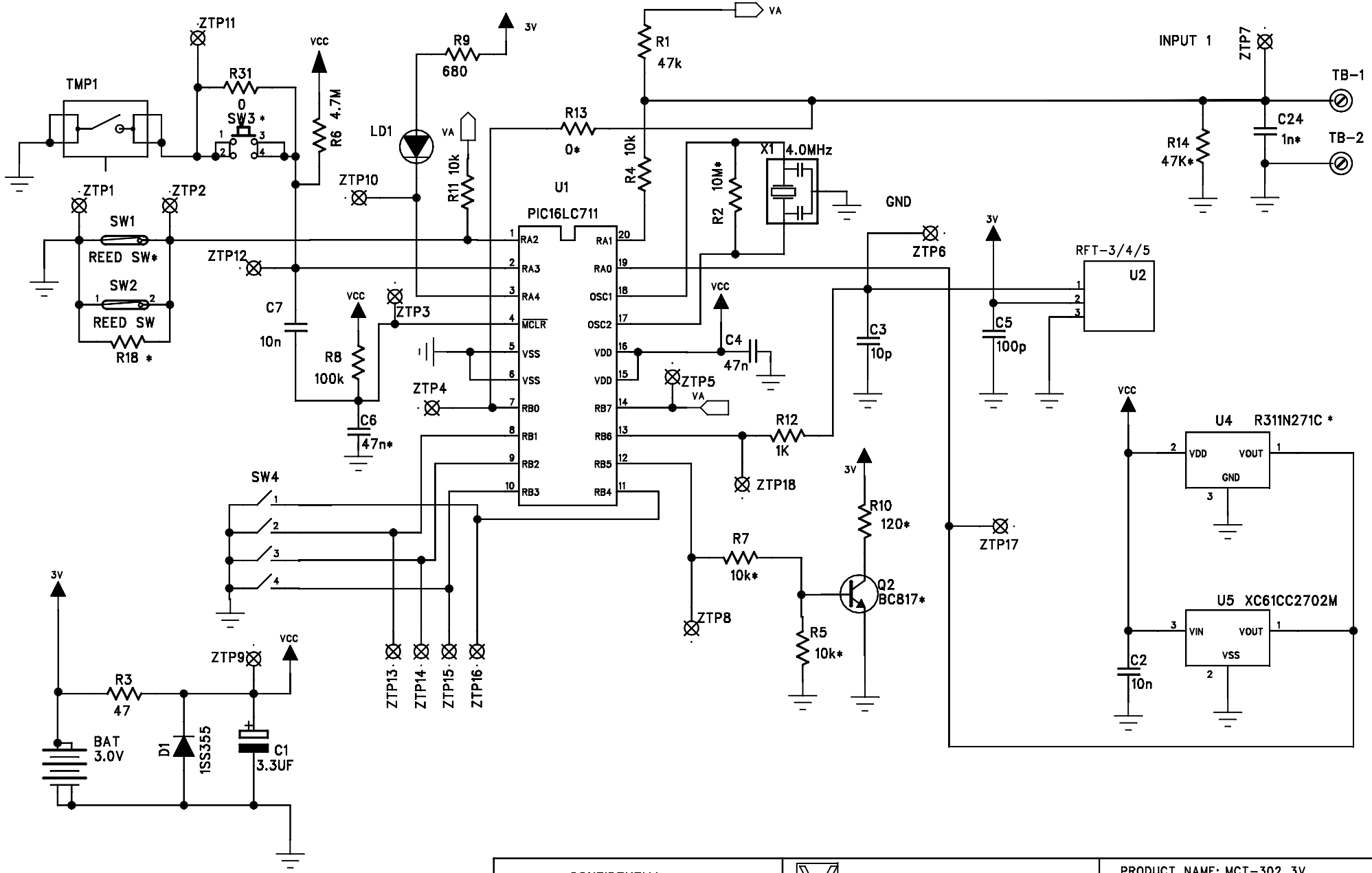

CONFIDENTIAL

This document contains information which is proprietary to Visonic Ltd. Israel. The use, copy or dissemination of this material for any purpose other than that which it is intended, is prohibited without the prior written consent of Visonic Ltd.

Date Released: to whom:

Visonic LTD.

APX.2-1-3	NAME	DATE	SIGNATURE
DESIGNED	EFIM O.	25.07.02	
DREW	ANDREI K.	25.07.02	
CHECKED			
UPDATED	SHAY Z.	08.10.02	
APPROVED	Y. PINHAS	08.10.02	

	UPD	ECOs
PRODUCT NAME: MCT-302 3V		
DRAWING TYPE: SCHEMATIC DIAGRAM	1	D-02-553
PCB Rev:A DOC Rev:11	2	D-02-917
CATALOG NO: E-2286-0	3	
DRAWING NO: EE-2286-11	4	
CAD FILE: EE228611.SCH	5	
SHEET #/OF: 1 / 1	6	