C-64358
DRAWING NO.

9056225

DIMENSIONAL DEVIATIONS	
THE FOLLOWING SPECIFICATION SUPERCEDES THE PRINT DIMENSION AND IS THE TOTAL PERMISSIBLE VARIATION APPROVED FOR PRODUCTION	
1	.082
2	.092
3	.460
4	.270
5	.099
6	.247
7	1.179

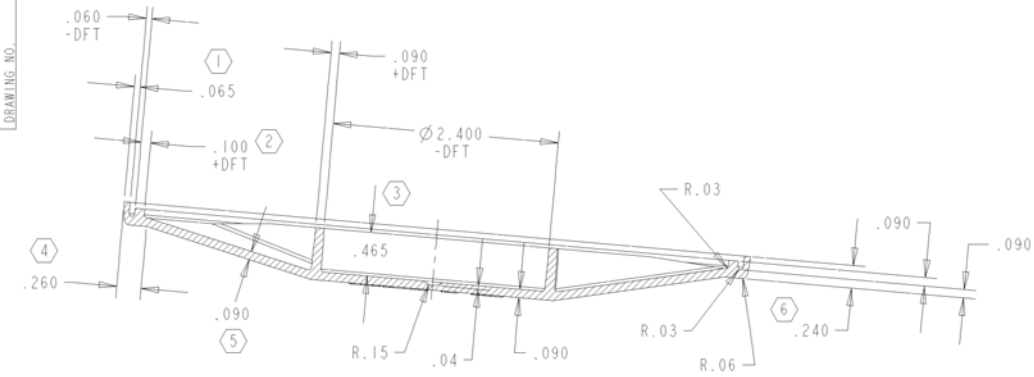

SECTION A-A

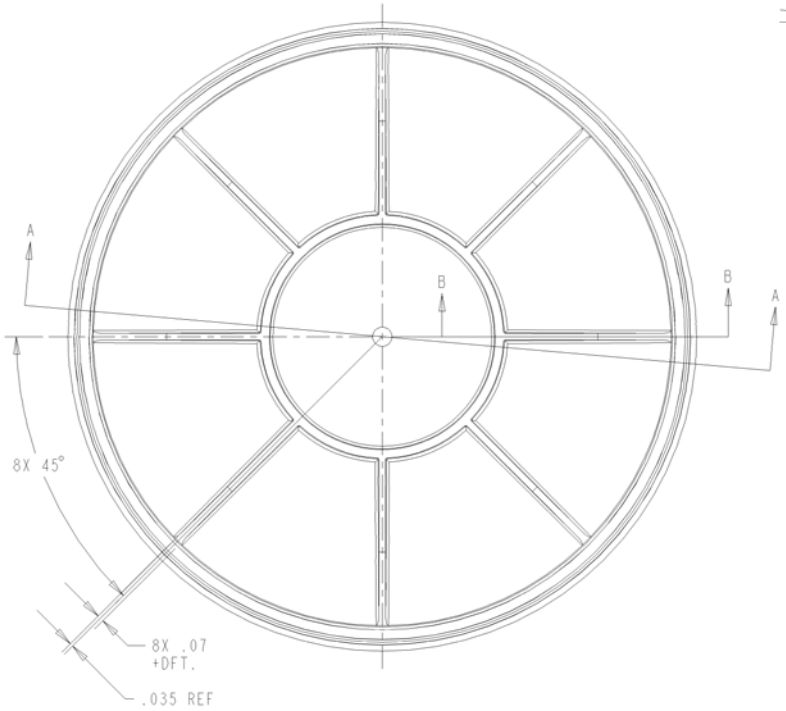

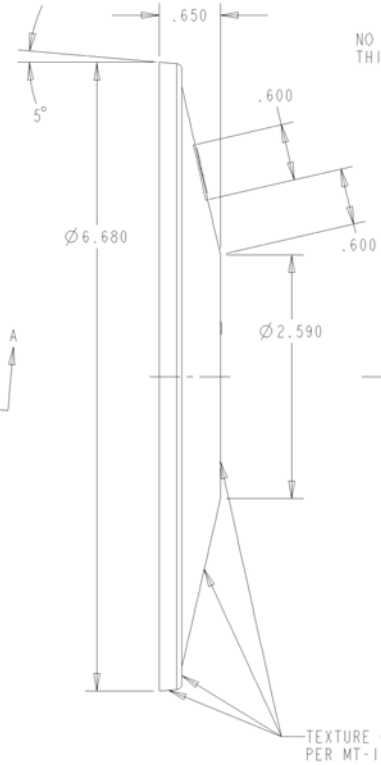

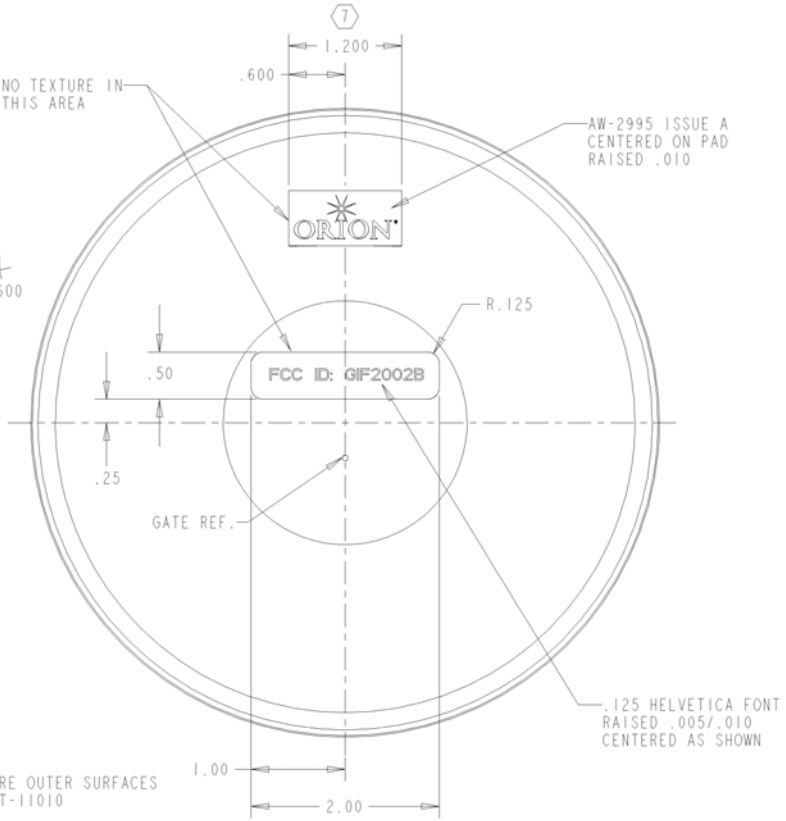

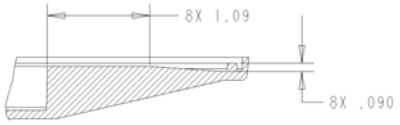

SECTION B-B

NOTES:
UNLESS OTHERWISE SPECIFIED:
1. DRAFT TO BE 1°
2. CORNERS SHOWN SHARP MAY HAVE A R.015 MAX.

CONFIDENTIAL

ALL PROPRIETARY RIGHTS IN THE SUBJECT MATTER SHOWN ON THIS DRAWING ARE EXCLUSIVE PROPERTY OF BADGER METER, INC.

UNLESS OTHERWISE SPECIFIED	
TOL. ON THREE PLACE DECIMAL DIMENSIONS ±	.005
TOL. ON TWO PLACE DECIMAL DIMENSIONS ±	.010
TOL. ON ANGULAR DIMENSIONS ±	0° 30′
MICRO-FINISH	
DEBURR:	PER. MFG. STD.

ISSUE	CHANGE	BY	DATE
D	8951	JS	10/11/02
C	8666	JS	08/08/02

BADGER METER, INC

ORION

TYPE	MODEL	SIZE
ANTENNA TOP - HOT PLATE WELD JOINT		

PART NAME:
ASA PER PMS-1111-1 (LURAN)
MATERIAL:

PART NO.	64358-001
REV.	2
DRAWN	JS 2/8/02
CHECKED	
APPROVED	
SCALE	1:1
SHEET	1 OF 1
DRAWING NO.	C-64358
ISSUE	D

EDN:

ECM