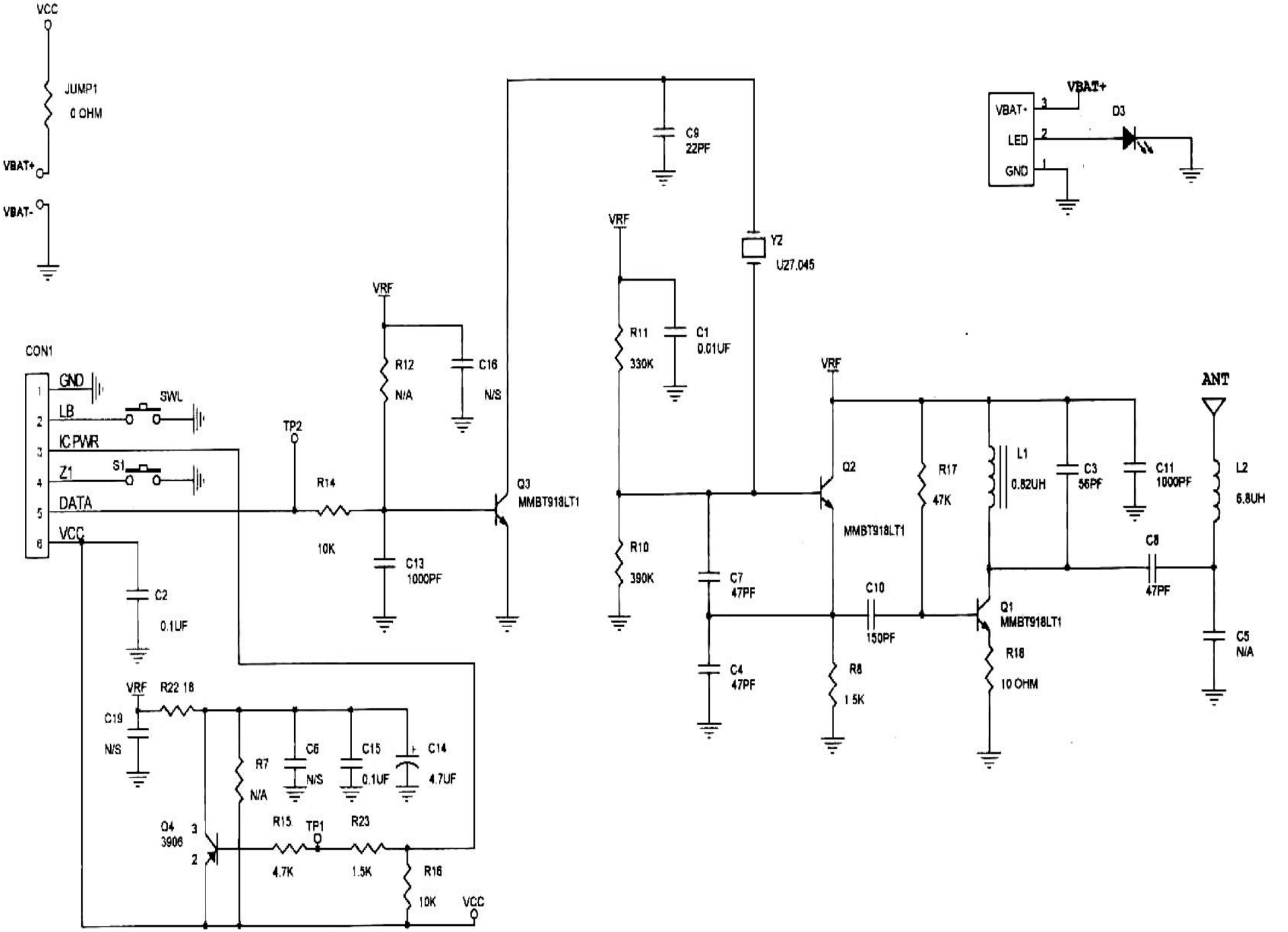
VCC
JUMP1
0 OHM
VBAT+
VBAT-
CON1
GND
LB
IC PWR
Z1
DATA
VCC
SWL
S1
C2
0.1UF
TP2
R14
10K
VRF
R12
N/A
C16
N/S
C13
1000PF
Q3
MMBT918LT1
C9
22PF
YZ
UZ7.045
R11
330K
C1
0.01UF
R10
390K
C7
47PF
C4
47PF
Q2
MMBT918LT1
R17
47K
C10
150PF
R8
1.5K
L1
0.82UH
C3
56PF
C11
1000PF
C8
47PF
Q1
MMBT918LT1
R18
10 OHM
ANT
L2
6.8UH
C5
N/A
VBAT+
LED
GND
D3
R22 18
C19
N/S
R7
N/A
C6
N/S
C15
0.1UF
C14
4.7UF
Q4
3906
R15
4.7K
TP1
R23
1.5K
R16
10K
UNIT: mm

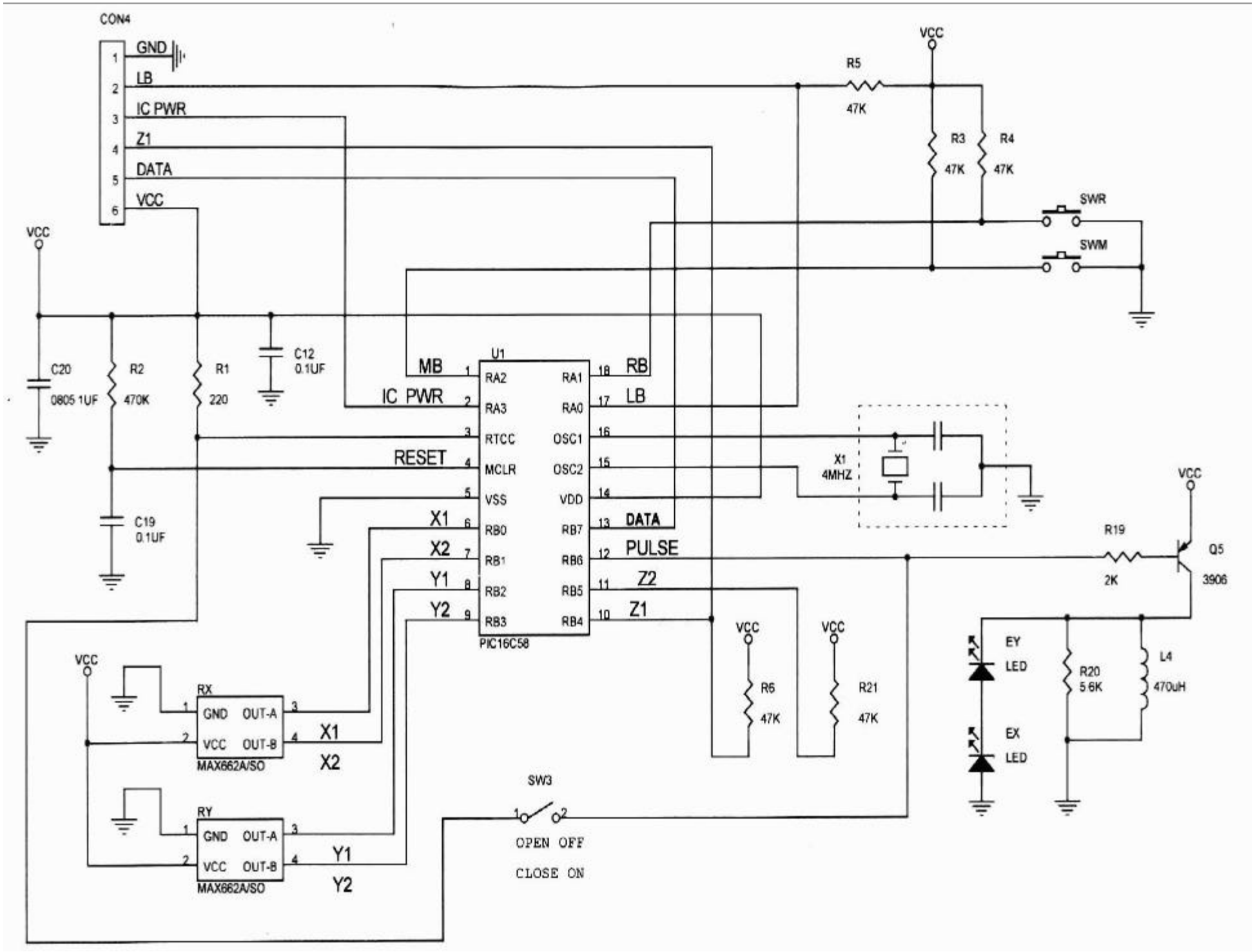
CON4
GND
LB
IC PWR
Z1
DATA
VCC
VCC
R5
47K
R3
47K
R4
47K
SWR
SWM
C20
0805 1UF
R2
470K
R1
220
C12
0.1UF
C19
0.1UF
U1
MB
IC PWR
RESET
X1
X2
Y1
Y2
RA2
RA3
RTCC
MCLR
VSS
RB0
RB1
RB2
RB3
RA1
RA0
OSC1
OSC2
VDD
RB7
RB6
RB5
RB4
RB
LB
DATA
PULSE
Z2
Z1
PIC16C58
X1
4MHZ
R19
2K
Q5
3906
R6
47K
R21
47K
EY
LED
EX
LED
R20
5.6K
L4
470uH
RX
GND
OUT-A
VCC
OUT-B
MAX662A/SO
RY
GND
OUT-A
VCC
OUT-B
MAX662A/SO
SW3
OPEN OFF
CLOSE ON