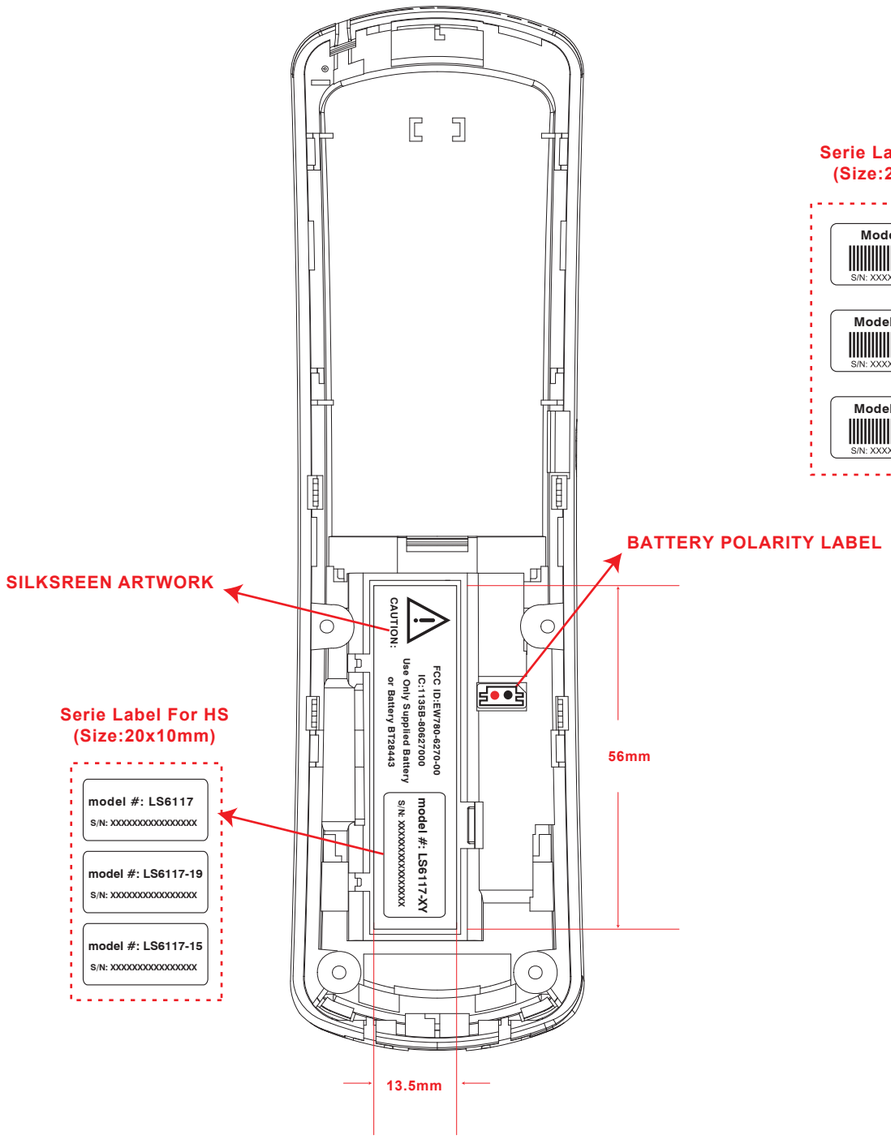
SILKSREEN ARTWORK
BATTERY POLARITY LABEL
Serie Label For HS
(Size:20x10mm)
model #: LS6117
S/N: XXXXXXXXXXXXXXXX
model #: LS6117-19
S/N: XXXXXXXXXXXXXXXX
model #: LS6117-15
S/N: XXXXXXXXXXXXXXXX
CAUTION:
FCC ID:EW780-6270-00
IC:1135B-80627000
Use Only Supplied Battery
or Battery BT28443
model #: LS6117-XY
S/N: XXXXXXXXXXXXXXXX
56mm
13.5mm

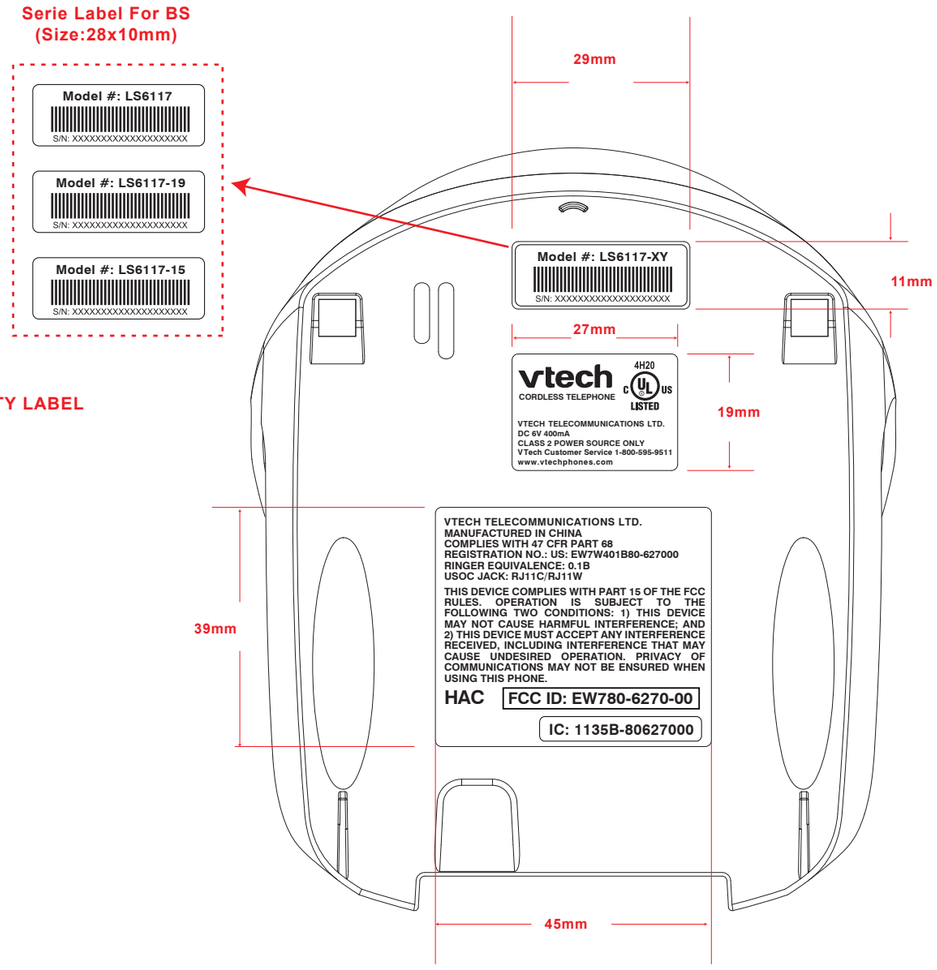
Serie Label For BS
(Size:28x10mm)
Model #: LS6117
S/N: XXXXXXXXXXXXXXXX
Model #: LS6117-19
S/N: XXXXXXXXXXXXXXXX
Model #: LS6117-15
S/N: XXXXXXXXXXXXXXXX
29mm
Model #: LS6117-XY
S/N: XXXXXXXXXXXXXXXX
11mm
27mm
vtech
CORDLESS TELEPHONE
4H20
LISTED
VTECH TELECOMMUNICATIONS LTD.
DC 6V 400mA
CLASS 2 POWER SOURCE ONLY
VTech Customer Service 1-800-595-9511
www.vtechphones.com
19mm
VTECH TELECOMMUNICATIONS LTD.
MANUFACTURED IN CHINA
COMPLIES WITH 47 CFR PART 68
REGISTRATION NO.: US: EW7W401B80-627000
RINGER EQUIVALENCE: 0.1B
USOC JACK: RJ11C/RJ11W
THIS DEVICE COMPLIES WITH PART 15 OF THE FCC RULES. OPERATION IS SUBJECT TO THE FOLLOWING TWO CONDITIONS: 1) THIS DEVICE MAY NOT CAUSE HARMFUL INTERFERENCE; AND 2) THIS DEVICE MUST ACCEPT ANY INTERFERENCE RECEIVED, INCLUDING INTERFERENCE THAT MAY CAUSE UNDESIRED OPERATION. PRIVACY OF COMMUNICATIONS MAY NOT BE ENSURED WHEN USING THIS PHONE.
HAC
FCC ID: EW780-6270-00
IC: 1135B-80627000
39mm
45mm

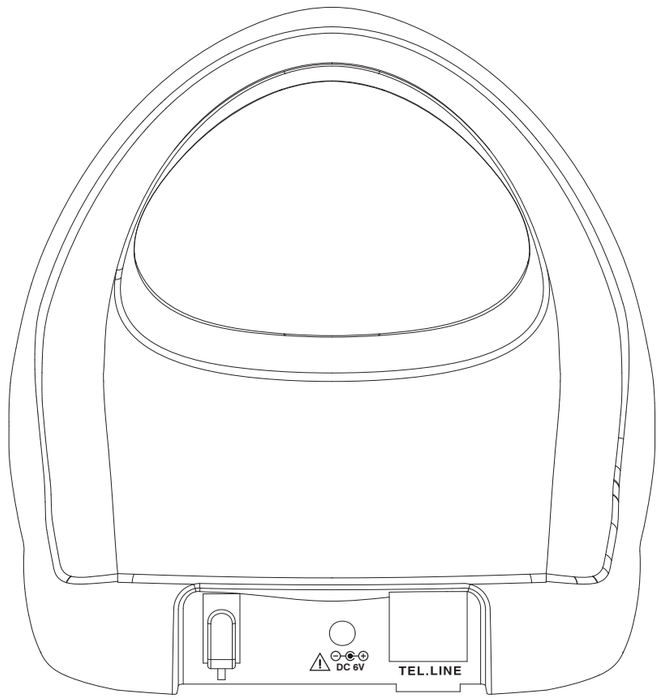
DC 6V
TEL.LINE