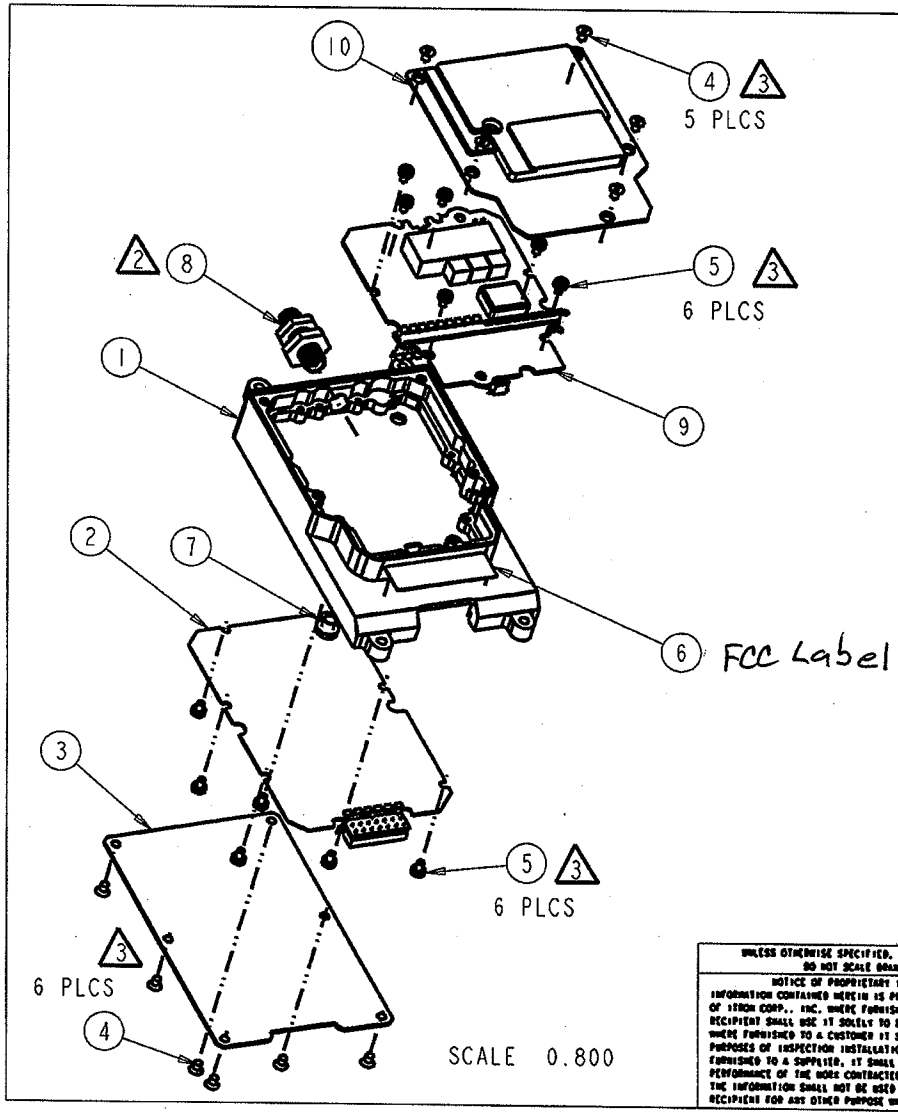

NOTES: (UNLESS OTHERWISE SPECIFIED)

1. ALL PARTS TO BE CLEAN AND FREE OF CONTAMINANTS BEFORE AND AFTER ASSEMBLY. PACKAGE IN A CLEAN ESD PROTECTIVE CONTAINER FOR SHIPMENT OR STORAGE.
2. (2) SURFACE OF ITEM 8 WITHOUT "O" RING TO BE AGAINST ITEM 1 HOUSING. TORQUE TO 10-12 INCH LBS.
3. (3) TORQUE SCREWS TO 2-3 INCH LBS.
4. FOR SPECIFIC DASH NUMBER AND PARTS REFER TO THE BILL OF MATERIALS.
5. TAMPER SEALS MAY BE ADDED AT MANUFACTURERS OPTION.

REV.	ECO	BY	DESCRIPTION	APP.	DATE
A	S2100365	GJA	PRODUCTION RELEASE	GP	3/21/08

UNLESS OTHERWISE SPECIFIED, DIMENSIONS IN INCHES
DO NOT SCALE DRAWING

NOTICE OF PROPRIETARY INFORMATION
INFORMATION CONTAINED HEREIN IS PROPRIETARY AND IS PROPERTY OF ITRON CORP., INC. WHERE FURNISHED WITH A PROPOSAL, THE RECIPIENT SHALL USE IT SOLELY TO EVALUATE THE PROPOSAL. WHERE FURNISHED TO A CUSTOMER IT SHALL BE USED SOLELY FOR PURPOSES OF INSPECTION INSTALLATION, OR MAINTENANCE. WHERE FURNISHED TO A SUPPLIER, IT SHALL BE USED SOLELY IN THE PERFORMANCE OF THE WORK CONTRACTED FOR BY THIS COMPANY. THE INFORMATION SHALL NOT BE USED OR DISCLOSED BY THE RECIPIENT FOR ANY OTHER PURPOSE WHATSOEVER.

TOL. EXCEPT AS NOTED
.XX ± .01 INCH
.XXX ± .005 INCH
ANG. ± 1°
.XXX DIMENSION NOT TO SCALE

THIRD ANGLE PROJECTION

Itron
2818 NORTH SULLIVAN ROAD
SPOKANE, WA 99216-1897

DRAWN ACHENBACH	DATE 3/20/08	TITLE PNR, FC2 S/R OMAP	
CHECKED PAULITZ	DATE 3/20/08		
ELEC. ENG. CORNWALL	DATE 3/20/08	SIZE B	DWG. NO. PNR-0010-000
MECH. ENG. ACHENBACH	DATE 3/20/08	REV. STATUS PRODUCTION	MODEL NAME PNR-0010-001
MFG. ENG. MARKS	DATE 3/20/08	SCALE NONE	SHEET 1 OF 1 REV. A