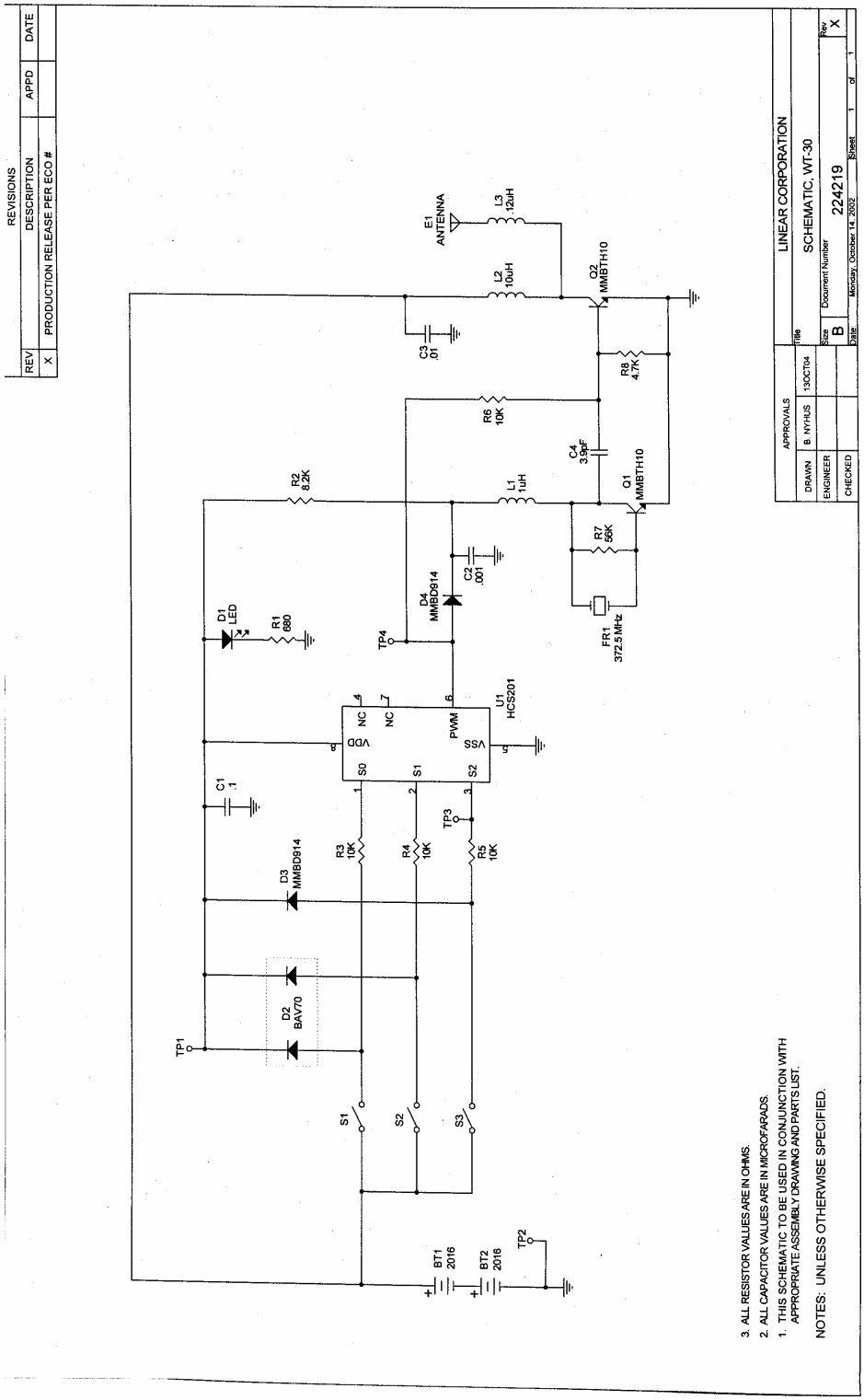
REVISIONS
REV
DESCRIPTION
APPD
DATE
X
PRODUCTION RELEASE PER ECO #
E1
ANTENNA
L3
12uH
L2
10uH
Q2
MMBTH10
C3
.01
R8
4.7K
R6
10K
C4
3.9pF
Q1
MMBTH10
R2
8.2K
L1
1uH
R7
56K
C2
.001
D4
MMBD914
FR1
372.5 MHz
D1
LED
R1
680
TP4
U1
HCS201
VDD
NC
NC
PWM
VSS
S0
S1
S2
C1
.1
TP3
R3
10K
R4
10K
R5
10K
D3
MMBD914
D2
BAV70
TP1
S1
S2
S3
BT1
2016
BT2
2016
TP2
LINEAR CORPORATION
APPROVALS
DRAWN
B. NYHUS
13OCT04
ENGINEER
CHECKED
Title
SCHEMATIC, WT-30
Size
B
Document Number
224219
Rev
X
Date:
Monday, October 14, 2002
Sheet
1
of
1
3. ALL RESISTOR VALUES ARE IN OHMS.
2. ALL CAPACITOR VALUES ARE IN MICROFARADS.
1. THIS SCHEMATIC TO BE USED IN CONJUNCTION WITH
APPROPRIATE ASSEMBLY DRAWING AND PARTS LIST.
NOTES: UNLESS OTHERWISE SPECIFIED.